BISON-BIAL S. A.

LATHE CHUCKS

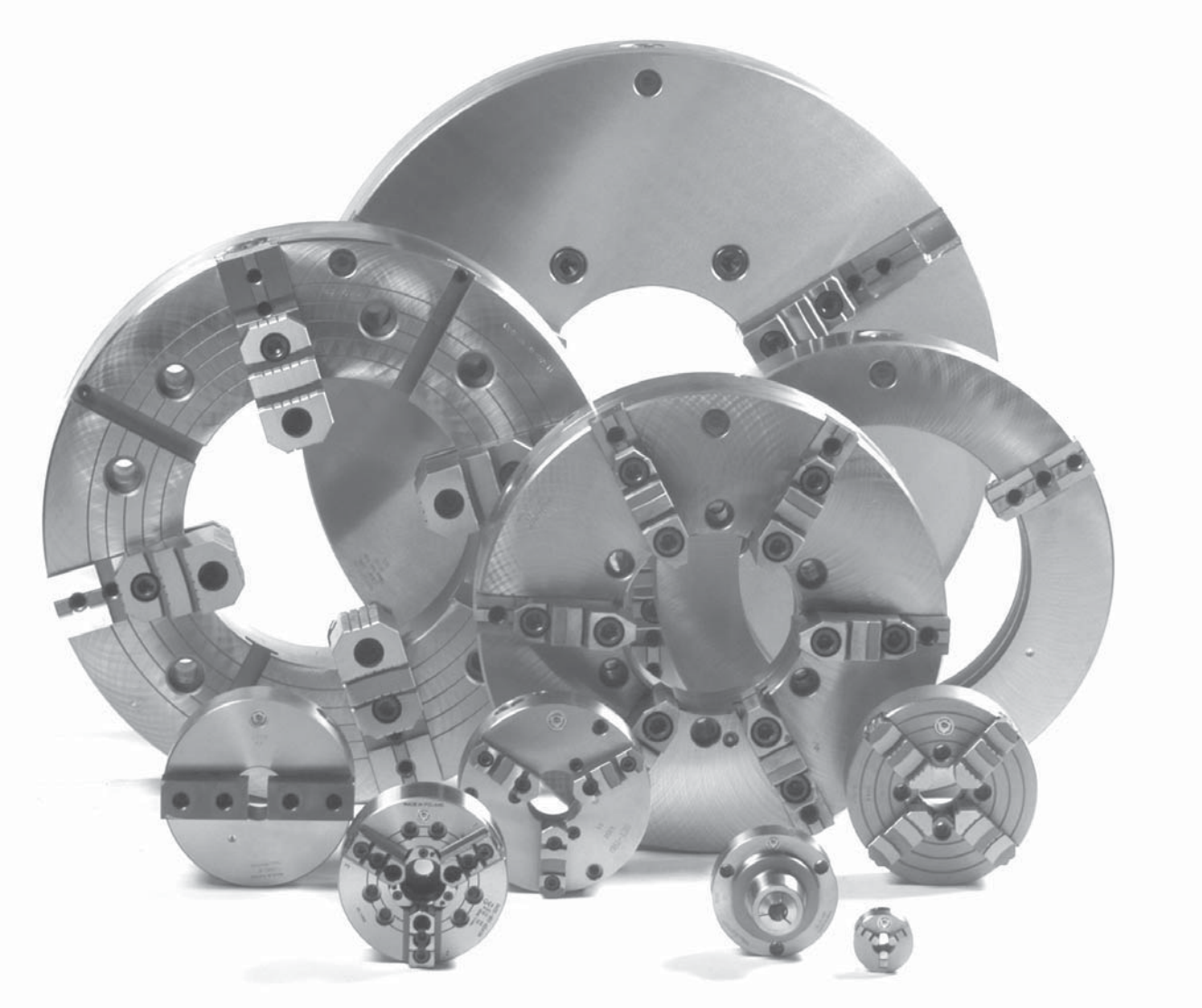

ISO 9001

CONTENTS

	Type	Page
Maschines spindle noses to DIN and ANSI standards		6-7
Guide for use of hand-operated BISON chucks		8-9
Standard self-centering scroll chucks		
2-jaw	3100	9
3-jaw	3200	11-12, 14-15
4-jaw	3600	11-12, 14-15
3-jaw	3286	26
6-jaw	3804, 3805	12, 15
Precision self-centering scroll chucks		
3-jaw	3500	10-15
4-jaw	3700	11-12, 14-15
6-jaw	3806, 3807	12, 15
Self-centering scroll chucks with fine adjustment		
„SET-TRU", 3-jaw	3564, 3565	22
„SET-TRU", 6-jaw	3864, 3865	22
3-jaw, tangential adjustment	3264, 3265	23
Scroll chucks for drills sharpening		
3-jaw	3266	24
6-jaw	3866, 3867, 3868	24-25
Collet chucks	3911, 3960	25
Self-centering and individually adjustable scroll chucks		
3-jaw	4505, 4705	27
4-jaw	4605, 4805	27
Self-centering wedge bar chucks	3400	32
4-jaw independent chucks	4300	36-39
Self-centering chucks with large through hole for pipe machining		
3-jaw, cast iron body	3295	43
3-jaw, steel body	3597	44
3-jaw precision, steel body	3515 HD	45
Independent chucks with large through hole for pipe machining		
4-jaw, steel body	4307 HD	46
4-jaw, steel body	4317 HD	47
4-jaw, steel body	4347 HD	48

CONTENS

		Type	Page
	Adapters **Adapters fully machined**	**8200** **8200-X**	**49-51** **52-54**
	Lathe chucks with Morse taper	**9154-4956**	**55-56**
	SPARE PARTS		
	for self-centering scroll chucks		**28-29**
	for self-centering wedge bar chucks		**35**
	for 4-jaw independent chucks		**42**
	ENGINEERING DATA		
	Main dimensions of		
	self-centering scroll chucks		**16-17**
	self-centering wedge bar chucks		**32**
	4-jaw independet chucks		**38-39**
	Main dimensions of jaws for		
	self-centering scroll chucks		**18-19**
	self-centering wedge bar chucks		**33**
	4-jaw independet chucks		**40**
	Gripping ranges of		
	self-centering scroll chucks		**20**
	self-centering wedge bar chucks		**34**
	4-jaw independet chucks		**41**
	Gripping power of the		
	self-centering chucks		**21**
	wedge bar chucks		**34**
	Maximum permissible rotational speeds for		
	self-centering scroll chucks		**20**
	self-centering wedge bar chucks		**34**
	4-jaw independet chucks		**41**
	Balance for self-centering lathe chucks		
	scroll chucks		**21**
	wedge bar chucks		**34**
	Centering accuracy of self-centering lathe chucks		
	scroll chucks		**21**
	wedge bar chucks		**34**

MACHINE SPINDLE NOSES

DIN 55026 Type A Type B - ISO 702/I Type A2 Type A1-A2

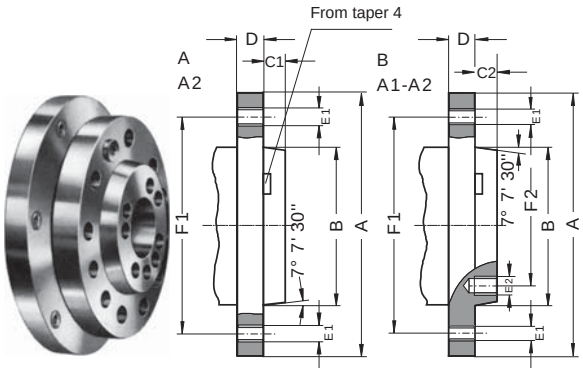

Spindle nose size	A	B max	C1	C2	D	E1	F1	E2	F2
3	92	53.983	11	-	16	3xM10	70.6	-	-
4	108	63.521	11	-	20	11xM10	82.6	-	-
5	133	82.573	13	14.288	22	11xM10	104.8	8xM10	61.9
6	165	106.385	14	15.875	25	11xM12	133.4	8xM12	82.6
8	210	139.731	16	17.462	28	11xM16	171.4	8xM16	111.1
11	280	196.883	18	19.05	35	11xM20 (11xM18)	235	8xM20 (8xM18)	165.1
15	380	285.791	19	20.638	42	12xM24 (12xM22)	330,2	11xM24 (11xM22)	247.6
20	520	412.795	21	22.225	48	12xM24	463,6	11xM24	368,3
28	725	584.248	24	25.400	56	12xM30	647.6	11xM30	530.2

Type A: Tapped holes in flange (outer bolt circle) without inner bolt circle.
Type B: Tapped holes in flange (outer bolt circle) and in inner bolt circle.

Dimensions in brackets according to ISO 702/I.

DIN 55027 & ISO 702/III

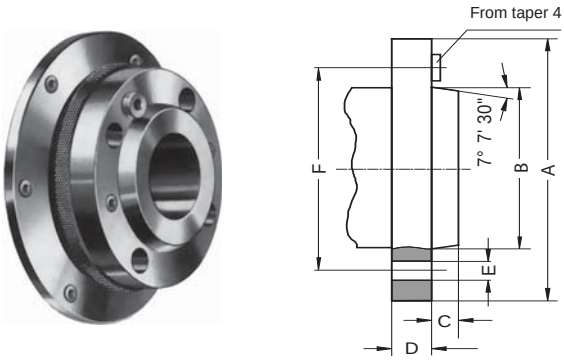

WITH BAYONET RING FIXING

Spindle nose size	A	B max	C	D	E	F
3	102	53.983	11	16	3x21	75
4	112	63.521	11	20	3x21	85
5	135	82.573	13	22	4x21	104.8
6	170	106.385	14	25	4x23	133.4
8	220	139.731	16	28	4x29	171.4
11	290	196.883	18	35	6x36	235
15	400	285.791	19	42	6x43	330.2
20	540	412.795	21	48	6x43	463.6

DIN 55029, ANSI B 5.9 & ISO 702/II

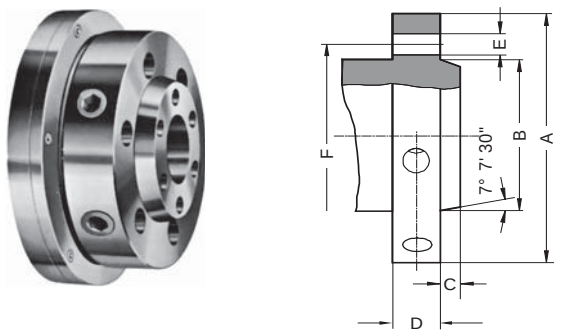

CAMLOCK FIXING

Spindle nose size	A	B max	C	D	E	F
3	92	53.983	11	32	3x15.1	70.6
4	117	63.521	11	34	3x16.7	82.6
5	146	82.573	13	38	6x19.8	104.8
6	181	106.385	14	45	6x23	133.4
8	225	139.731	16	50	6x26.2	171.4
11	298	196.883	18	60	6x31	235
15	403	285.791	19	70	6x35.7	330.2
20	546	412.795	21	82	6x42.1	463.6

DIN 800

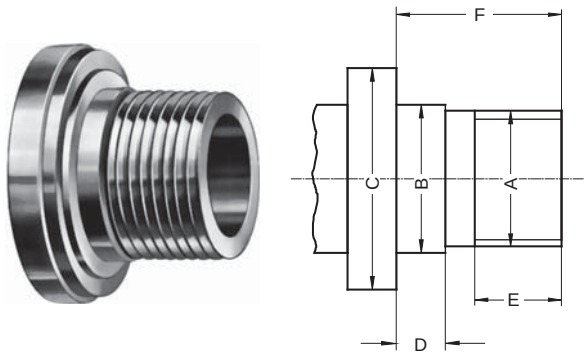

WITH THREAD

A	Bg5	C min	D	E	F
M 20	21	30	6.3	10	20
M 24	25	36	8	12	24
M 33	34	50	9	14	30
M 39	40	56	10	16	35
M 45	46	67	11	18	40
M 52	55	80	12	20	45
M 60	62	90	14	22	50
M 76x6	78	112	16	30	63
M 105x6	106	150	20	40	80

Last edition of relevant DIN standard applies in each case

MACHINE SPINDLE NOSES TO ANSI B 5.9; ASA B 5.9

TYPE A1 - A2

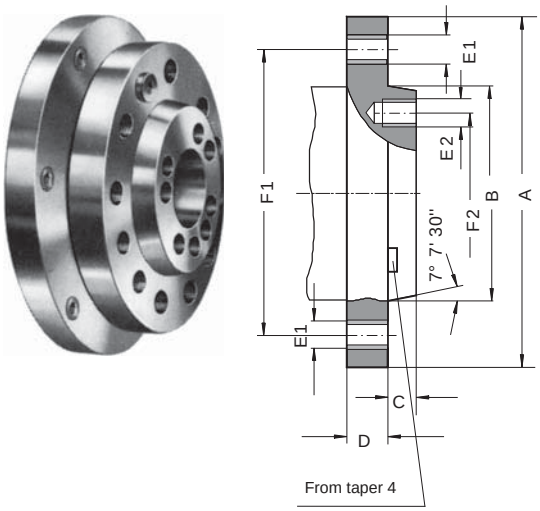

Spindle nose size								

Type A: Tapped holes in flange (outer bolt circle) without inner bolt circle.

A2

Spindle nose size	A	B max	C	D	E1	F1
3	92.1	53.985	11.1	15.9	3x7/16-14 UNC	70.66
4	108	63.525	11.1	19	11x7/16-14 UNC	82.55
5	133.4	82.575	12.7	22.2	11x7/16-14 UNC	104.8
6	165.1	106.390	14.3	25.4	11x1/2-13 UNC	133.4
8	209.5	139.735	15.9	28.6	11x5/8-11 UNC	171.4
11	279.4	196.885	17.5	34.9	11x3/4-10 UNC	235
15	381	285.8	19	41.3	12x7/8-9 UNC	330.2
20	520	412.8	20.6	47.6	12x1-8 UNC	463.6

Type A1-A2 correspond ISO 702/I.
Tapped holes in flange (outer bolt circle) without inner bolt circle.

TYPE B1 - B2

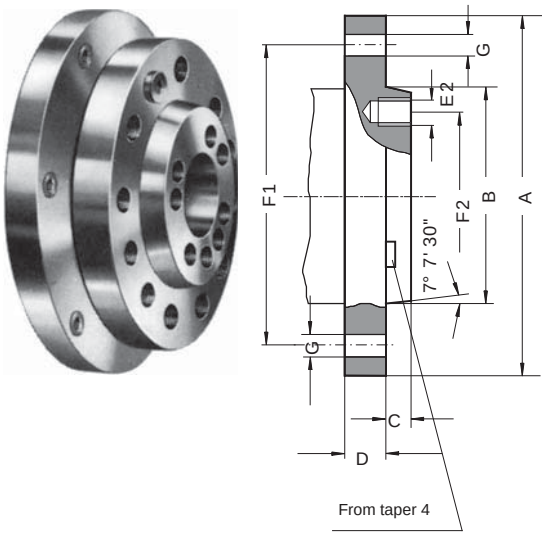

B1

Spindle nose size	A	B max	C -0,025	D	G	F1	E2	F2
5	133.4	82.575	14.288	22.2	11x11.9	104.8	8x7/16-14 UNC	61.9
6	165.1	106.390	15.875	25.4	11x13.5	133.4	8x1/2-13 UNC	82.6
8	209.5	139.735	17.462	28.6	11x16.7	171.4	8x5/8-11 UNC	111.1
11	279.4	196.885	19.05	34.9	11x20.2	235	8x3/4-10 UNC	165.1
15	381	285.8	20.638	41.3	12x23.4	330.2	11x7/8-9 UNC	247.6
20	520	412.8	22.225	47.6	12x26.6	463.6	11x1-8 UNC	368.3

Through-holes in flange (outer bolt circle) tapped holes in inner bolt circle.From taper size 4 with driver.

B2

Spindle nose size	A	B max	C	D	G	F1
3	92.1	53.985	11.1	15.9	3x11.9	70.66
4	108	63.525	11.1	19	11x11.9	82.55
5	133.4	82.575	12.7	22.2	11x11.9	104.8
6	165.1	106 .390	14.3	25.4	11x13,5	133.4
8	209.5	139.735	15.9	28.6	11x16.7	171.4
11	279.4	196.885	17.5	34.9	11x20.2	235
15	381	285.8	19	41,3	12x23.2	330.2
20	520	412.8	20.6	47.6	12x26.6	463.6

Through-holes in flange (outer bolt circle) without inner bolt circle.

TYPE L

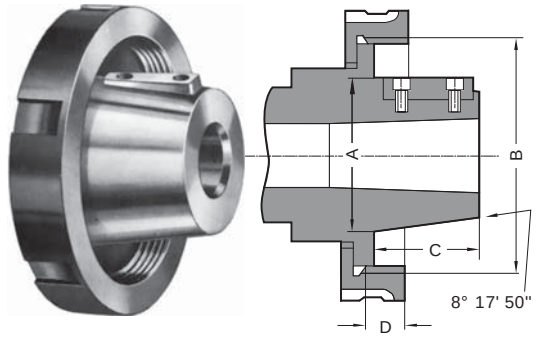

LONG TAPER

Spindle nose size	A+0.051	B	C	D	Driving key
L00	69.850	3 3/4-6 UNS	50.800	14.288	⌀ 9.525x38.1
L0	82.550	4 1/2-6 UNS	60.325	15.875	⌀ 9.525x44.45
L1	104.775	6-6 UNS	73.025	19.050	⌀15.875x60.32
L2	133.350	7 3/4-5 UNS	85.725	25.400	⌀ 19.05x73.02
L3	165.100	10 3/8-4 UNS	94.425	28.575	⌀ 25.4x82.55

BISON - SELF CENTERING SCROLL LATHE

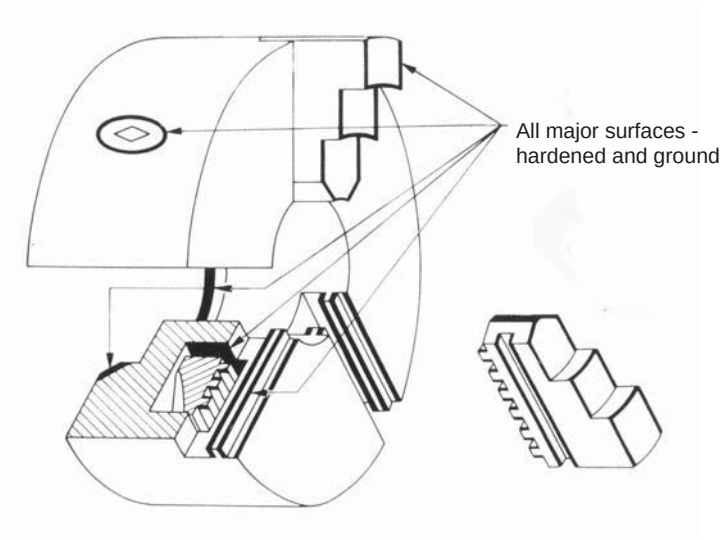

Type 3500, 3700 chuck

A PROVEN DESIGN (THE CUSHMAN TYPE) FOR UNIVERSAL USE BUILT IN THREE MAIN LINES :

- standard chucks - with cast iron body for normal use
- precision chucks - with steel body for precision and high precision machining; extended period of life - expectancy
- super precision chucks - with adjustment

All components which are important for transmitting the chucking force are of modern and compact design.

BODY

- type 3500, 3700 chucks - drop-forged of highest grade steel, hardened and ground
- type 3200, 3600 chucks - high quality cast-iron

SCROLL PLATE

- drop-forged of fine alloy steel, carburized and hardened
- thread flanks ground on both sides

JAWS

- of fine alloy steel, teeth, guides and other working surfaces carburized, hardened and ground

PINIONS

- of alloy steel, carburized, hardened and ground
- pinions are recessed into the chuck body and special safety spring is mounted on the operating wrench preventing against the risk of accidents

Each scroll plate and assembled precision chuck are statically balanced within fine limits.
Lathe chucks must be lubricated regulary to maintain their gripping force.
Appropriate directions are included in the operating instructions supplied with each chuck.
All chucks are equipped with grease nipples for convenient maintenance.

SELF-CENTERING SCROLL CHUCKS

	●	●	●	●	●		●	●
	●	●	●	●	●		●	▲
	■	●	●		■			
	■					■		
	●	▲	●		■		▲	
							■	■
	●	●	●				●	●
	■		■					
	■				■			

● ■ ▲

Chucks form A mounting to ISO 702/I on request.

Used for machining all types of workpieces of irregular shapes.

Standard accessories:
* 1 set of soft top jaws
* 1 wrench
* 1 set of mounting screws

Chuck and jaw weight in dimension tables
Spare parts see page 28
Engineering data see page 20, 21

SELF-CENTERING 2-JAWS CHUCKS, 2-PIECE SOFT TOP JAWS, CAST IRON BODY

	Chuck size	Through hole	Code No 0642
DIN 6350	**mm**		**Type 3105**
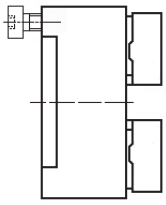	160	42	531 050 403
	200	55	531 050 505
	250	76	531 050 607
	315	103	531 050 709
	400	136	531 050 800

Example of order : 3105-400 or 0642 531 050 800

STANDARD SELF-CENTERING SCROLL CHUCKS

Used when high accuracy of machining is needed.

Standard accessories:
* 1 set of outside hard-solid jaws
* 1 set of inside hard-solid jaws
* 1 wrench
* 1 set of mounting screws

Optional accessories:
* 1 set of hard masters jaws
* 1 set of soft solid jaws
* 1 set of soft 2-piece jaws (hard master + top soft)

Size 500, 630 with T-slots
Chuck and jaw weight in dimension tables
Spare parts see page 28. Engineering data see page 20, 21.

PRECISION SELF-CENTERING 3- JAWS CHUCKS, SOLID JAWS, I st CLASS ACCURACY, STEEL BODY

	Chuck size mm	Short taper 1:4	Through hole mm	Code No 0642		Chuck size mm	Short taper 1:4	Through hole mm	Code No 0642
DIN 6350	**Type 3504**				**DIN 55026**	**Type 3514**			
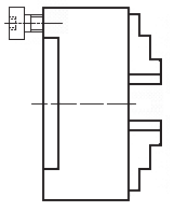	80		16	535 040 105	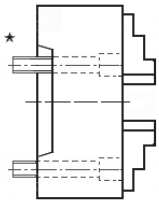	160	*5	42	535 142 603
	100		20	535 040 207		200	*5	42	535 143 003
	125		35,5	535 040 309		200	*6	55	535 143 105
	160		42	535 040 400		250	5	76	535 143 309
	200		55	535 040 502		250	*6	55	535 143 400
	250		76	535 040 604		250	*8	76	535 143 502
	315		103	535 040 706		315	6	103	535 143 706
	400		136	535 040 808		315	*8	103	535 143 808
	500		190	535 040 900		400	8	136	535 144 106
	630		252	535 041 106		400	*11	130	535 144 208
						500	8	136	535 144 707
						500	11	190	535 144 809
						630	11	190	535 145 504
						630	15	252	535 145 606
DIN 55027	**Type 3534**				**DIN 55029**	**Type 3544**			
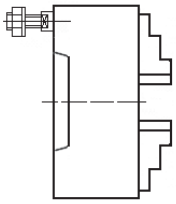	125	3	35,5	535 342 007	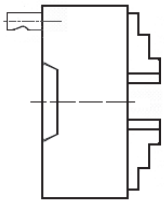	100	3	20	535 442 004
	125	4	35,5	535 342 200		125	3	35,5	535 442 106
	160	4	42	535 342 404		125	4	33,5	535 442 208
	160	5	42	535 342 506		160	3	42	535 442 300
	200	5	55	535 342 903		160	4	42	535 442 401
	200	6	55	535 343 008		160	5	42	535 442 503
	250	6	76	535 343 303		200	4	55	535 442 809
	250	8	76	535 343 405		200	5	55	535 442 900
	315	6	103	535 343 609		200	6	55	535 443 005
	315	8	103	535 343 700		250	6	76	535 443 300
	315	11	103	535 343 802		250	8	76	535 443 402
	400	8	136	535 344 009		315	6	103	535 443 608
	400	11	136	535 344 100		315	8	103	535 443 708
	500	8	136	535 344 508		315	11	103	535 443 800
	500	11	190	535 344 600		400	8	136	535 444 006
	630	11	190	535 344 701		400	11	136	535 444 108
	630	15	252	535 344 803		500	8	136	535 444 301
						500	11	190	535 444 403
						630	8	136	535 445 200
						630	11	190	535 445 302
						630	15	252	535 445 404
	Type 3574								
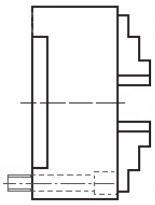	80		16	535 740 106					
	100		20	535 740 208					
	125		35,5	535 740 300					
	160		42	535 740 401					
	200		55	535 740 503					
	250		76	535 740 605					
	315		103	535 740 707					
	400		136	535 740 809					

* mounting from front in the inner bolt circle

Example of order: 3514-200/5-I or 0642 535 143 003

STANDARD SELF-CENTERING SCROLL CHUCKS

For use on lathes, rotary tables, indexing heads, etc.

Standard accessories:
* 1 set of outside hard-solid jaws
* 1 set of inside hard-solid jaws
* 1 wrench
* 1 set of mounting screws

Optional accessories:
* 1 set of hard masters jaws
* 1 set of soft solid jaws
* 1 set of soft 2-piece jaws (hard master + top soft)

Size 500, 630 with T-slots
Chuck and jaw weight in dimension tables
Spare parts see page 28
Engineering data see page 20, 21

SELF-CENTERING 3 & 4 - JAWS CHUCKS, HARD SOLID JAWS

	Chuck size	Short taper 1:4	Through hole	3 - jaw chucks		4 - jaw chucks	
				Standard cast iron body	Precision steel body	Standard cast iron body	Precision steel body
				Code No 0642	Code No 0642	Code No 0642	Code No 0642
DIN 6350	**mm**		**mm**	**Type 3204**	**Type 3504**	**Type 3604**	**Type 3704**
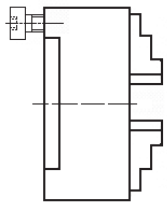	80	-	16	532 040 106	535 045 100	-	-
	100	-	20	532 040 208	535 045 201	536 040 203	537 040 200
	110	-	27	532 041 504	-	536 041 500	-
	125	-	32**	532 040 300	535 045 303	536 040 305	537 040 301
	140	-	40	532 041 606	-	536 041 601	-
	160	-	42	532 040 401	535 045 405	536 040 407	537 040 403
	200	-	55	532 040 503	535 045 507	536 040 509	537 040 505
	250	-	76	532 040 605	535 045 609	536 040 600	537 040 607
	315	-	103	532 040 707	535 045 700	536 040 702	537 040 709
	400	-	136	532 040 809	535 045 802	536 040 804	537 040 800
	500	-	190	532 040 900	-	536 040 906	537 040 902
	630	-	252	532 041 005	-	536 041 102	537 040 956
	800	-	320	532 041 107	-	-	-
DIN 55026				**Type 3214**	**Type 3514**	**Type 3614**	**Type 3714**
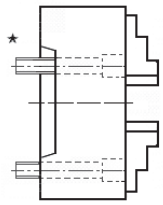	160	*5	42	532 142 502	535 146 108	-	-
	200	*5	42	532 142 900	535 146 403	-	537 142 901
	200	*6	55	532 143 004	535 146 505	536 143 000	537 143 006
	250	5	76	532 143 208	535 146 709	536 143 203	537 143 200
	250	*6	55	532 143 300	535 146 800	536 143 305	537 143 301
	250	*8	76	532 143 401	535 146 902	536 143 407	537 143 403
	315	6	103	532 143 605	535 147 109	536 143 600	537 143 607
	315	*8	80	532 143 707	535 147 200	536 143 702	537 143 709
	400	6	103	532 143 900	-	536 143 906	537 143 902
	400	8	136	532 144 005	535 147 506	536 144 000	537 144 007
	400	*11	130	532 144 110	535 147 610	536 144 115	537 144 111
	500	8	136	532 144 209	-	536 144 204	-
	500	11	190	532 144 313	-	536 144 319	-
	630	11	190	532 144 619	-	-	537 144 180
	630	*15	190	532 144 710	-	-	-
	800	11	190	532 144 812	-	-	-
	800	*15	190	532 145 019	-	-	-
	800	20	320	532 144 901	-	-	-
DIN 55027				**Type 3234**	**Type 3534**	**Type 3634**	**Type 3734**
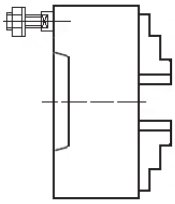	100	3	20	532 342 008	-	-	-
	125	3	32**	532 342 100	535 345 702	536 342 105	537 342 101
	125	4	32**	532 342 201	535 345 804	536 342 207	537 342 203
	160	3	42	532 342 303	-	536 342 309	-
	160	4	42	532 342 405	535 346 000	536 342 400	537 342 407
	160	5	42	532 342 507	535 342 102	536 342 502	537 342 509
	160	6	42	532 342 609	-	536 342 604	-
	200	3	51.4	532 342 700	-	536 342 706	-
	200	4	55	532 342 802	-	536 342 808	-
	200	5	55	532 342 904	535 346 306	536 342 900	537 342 906
	200	6	55	532 343 009	535 346 408	536 343 004	537 343 000
	250	6	76	532 343 304	535 346 703	536 343 300	537 343 306
	250	8	76	532 343 406	535 346 805	536 343 401	537 343 408
	315	6	103	532 343 600	535 347 001	536 343 605	537 343 601
	315	8	103	532 343 701	535 347 103	536 343 707	537 343 703
	315	11	103	532 343 803	535 347 205	-	-
	400	6	103	532 343 905	-	536 343 900	-
	400	8	136	532 344 000	535 347 409	536 344 005	537 344 001
	400	11	136	532 344 101	535 347 500	536 344 107	537 344 103
	500	8	136	532 344 203	-	536 344 209	537 344 908
	500	11	190	532 344 305	-	536 344 300	537 345 002
	630	11	190	532 344 600	-	-	537 345 705
	630	15	252	532 344 702	-	-	537 345 807

STANDARD SELF-CENTERING SCROLL CHUCKS

SELF-CENTERING 3 & 4 - JAWS CHUCKS, HARD SOLID JAWS

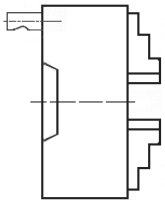

	Chuck size	Short taper 1:4	Through hole	3 - jaw chucks		4 - jaw chucks	
				Standard cast iron body	Precision steel body	Standard cast iron body	Precision steel body
				Code No 0642	Code No 0642	Code No 0642	Code No 0642
DIN 55029	**mm**		**mm**	**Type 3244**	**Type 3544**	**Type 3644**	**Type 3744**
	100	3	20	532 442 005	535 445 608	-	-
	125	3	32**	532 442 107	535 445 700	536 442 102	537 442 109
	125	4	32**	532 442 209	535 445 801	536 442 204	537 442 200
	160	3	42	532 442 300	535 445 903	536 442 306	537 442 302
	160	4	42	532 442 402	535 446 008	536 442 408	537 442 404
	160	5	42	532 442 504	535 446 100	536 442 500	537 442 506
	200	3	51.4	532 442 708	-	536 442 703	-
	200	4	55	532 442 800	535 446 201	536 442 805	537 442 801
	200	5	55	532 442 901	535 446 303	536 442 907	537 442 903
	200	6	55	532 443 006	535 446 405	536 443 001	537 443 008
	250	5	76	532 443 200	-	536 443 205	-
	250	6	76	532 443 301	535 446 700	536 443 307	537 443 303
	250	8	76	532 443 403	535 446 802	536 443 409	537 443 405
	315	6	103	532 443 607	535 447 009	536 443 602	537 443 609
	315	8	103	532 443 709	535 447 100	536 443 704	537 443 700
	315	11	103	532 443 800	535 447 202	-	-
	400	6	103	532 443 902	-	536 443 908	-
	400	8	136	532 444 007	535 447 406	536 444 002	537 444 009
	400	11	136	532 444 109	535 447 508	536 444 104	537 444 100
	500	8	136	532 444 200	-	536 444 206	537 444 600
	500	11	190	532 444 302	-	536 444 308	537 444 701
	630	11	190	532 444 608	-	-	537 445 702
	630	15	252	532 444 700	-	-	537 445 804
				Type 3274	**Type 3574**	**Type 3674**	**Type 3774**
	80		16	532 743 100	535 743 109	-	-
	85		18	532 744 202	-	-	-
	100		20	532 743 201	535 743 200	-	-
	125		32**	532 743 303	535 743 302	536 740 115	-
	160		42	532 743 405	535 743 404	536 740 217	537 740 302
	200		55	532 743 507	535 743 506	536 740 306	537 740 404
	250		76	532 743 609	535 743 608	536 740 408	537 740 506
	315		103	532 743 700	535 743 700	536 740 500	537 740 608
	400		136	532 743 802	535 743 801	-	537 740 700
	500		190	532 740 900	-	-	-
	630		252	532 740 941	-	-	-
	Threaded mounting			**Type 3284**			
	100	M24x3	20	532 840 002			

* mounting from front in the inner bolt circle ** 35,5 for 3500, 3700

Example of order : 3244-200/6 or 0642 532 443 006

SELF-CENTERING 6 - JAWS CHUCKS, HARD SOLID JAWS

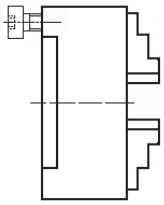

	Chuck size	Through hole	Standard cast iron body	Precision steel body
			Code No 0642	Code No 0642
DIN 6350	**mm**	**mm**	**Type 3804**	**Type 3806**
	200	58	538 040 308	538 060 304
	250	76	538 040 400	538 060 406
	315	103	538 040 501	538 060 508
	400	136	538 040 603	538 060 600
	500	190	538 040 705	538 060 701
	630	252	538 040 807	538 060 803

Example of order : 3804-200 or 0642 538 040 308

STANDARD SELF-CENTERING SCROLL CHUCKS

Used when high accuracy of machining is needed.

Standard accessories:
* 1 set of hard sectional jaws (master+hard top reversible)
* 1 wrench
* 1 set of mounting screws

Optional accessories:
* 1 set of soft top jaws
* 1 set of outside hard solid jaws
* 1 set of inside hard solid jaws

Size 500, 630 with T-slots
Chuck and jaw weight in dimension tables
Spare parts see page 28
Engineering data see page 20, 21

PRECISION SELF-CENTERING 3- JAWS CHUCKS, HARD REVERSIBLE JAWS, I st CLASS ACCURACY, STEEL BODY

DIN 6350 — **Type 3505**

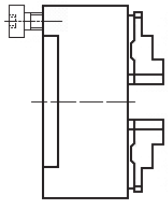

Chuck size mm	Short taper 1:4	Through hole mm	Code No 0642
125		35,5	535 050 307
160		42	535 050 409
200		55	535 050 500
250		76	535 050 602
315		103	535 050 704
400		136	535 050 806
500		190	535 050 908
630		252	535 051 104

DIN 55026 — **Type 3515**

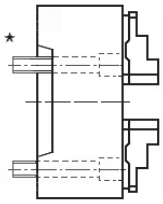

Chuck size mm	Short taper 1:4	Through hole mm	Code No 0642
160	*5	42	535 152 500
200	*5	42	535 152 907
200	*6	55	535 153 001
250	5	76	535 153 205
250	*6	55	535 153 307
250	*8	76	535 153 409
315	6	103	535 153 602
315	*8	80	535 153 704
400	8	136	535 154 002
400	*11	130	535 154 117
500	8	136	535 154 603
500	11	190	535 154 705
630	11	190	535 155 400
630	15	252	535 155 502

DIN 55027 — **Type 3535**

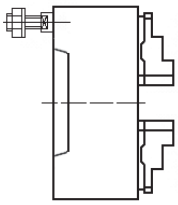

Chuck size mm	Short taper 1:4	Through hole mm	Code No 0642
125	3	35,5	535 352 107
125	4	35,5	535 352 209
160	4	42	535 352 402
160	5	42	535 352 504
200	5	55	535 352 901
200	6	55	535 353 006
250	6	76	535 353 301
250	8	76	535 353 403
315	6	103	535 353 607
315	8	103	535 353 709
315	11	103	535 353 800
400	8	136	535 354 007
400	11	136	535 354 109
500	8	136	535 354 506
500	11	190	535 354 608
630	11	190	535 354 700
630	15	252	535 354 801

DIN 55029 — **Type 3545**

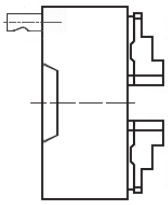

Chuck size mm	Short taper 1:4	Through hole mm	Code No 0642
125	3	35,5	535 452 104
125	4	35,5	535 452 206
160	3	42	535 452 308
160	4	42	535 452 400
160	5	42	535 452 501
200	4	55	535 452 807
200	5	55	535 452 909
200	6	55	535 453 003
250	6	76	535 453 309
250	8	76	535 453 400
315	6	103	535 453 604
315	8	103	535 453 706
315	11	103	535 453 808
400	8	136	535 454 004
400	11	136	535 454 106
500	8	136	535 454 300
500	11	190	535 454 401
630	8	136	535 455 209
630	11	190	535 455 300
630	15	252	535 455 402

Type 3575

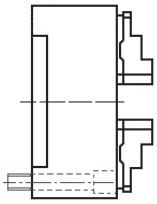

Chuck size mm	Short taper 1:4	Through hole mm	Code No 0642
125		35,5	535 750 308
160		42	535 750 400
200		55	535 750 501
250		76	535 750 603
315		103	535 750 705
400		136	535 750 807

* mounting from front in the inner bolt circle

Example of order : 3515-250/5-I or 0642 535 153 205

STANDARD SELF-CENTERING SCROLL CHUCKS

For use on lathes, rotary tables, indexing heads, etc.

Standard accessories:
* 1 set of hard sectional jaws (master+hard top reversible)
* 1 1wrench
* 1 set of mounting screws

Optional accessories:
* 1 set of soft top jaws
* 1 set of outside hard solid jaws
* 1 set of inside hard solid jaws

Chuck and jaw weight in dimension tables
Spare parts see page 28
Engineering data see page 20, 21.

SELF-CENTERING 3 & 4 - JAWS CHUCKS, HARD REVERSIBLE JAWS

	Chuck size	Short taper 1:4	Through hole	3 - jaw chucks		4 - jaw chucks	
				Standard cast iron body	Precision steel body	Standard cast iron body	Precision steel body
				Code No 0642	Code No 0642	Code No 0642	Code No 0642
DIN 6350	**mm**		**mm**	**Type 3205**	**Type 3505**	**Type 3605**	**Type 3705**
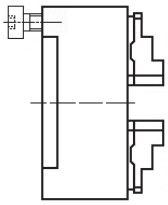	125	-	32**	532 050 308	535 055 301	536 050 303	537 050 300
	160	-	42	532 050 400	535 055 403	536 050 405	537 050 401
	200	-	55	532 050 501	535 055 505	536 050 507	537 050 503
	250	-	76	532 050 603	535 055 607	536 050 609	537 050 605
	315	-	103	532 050 705	535 055 709	536 050 700	537 050 707
	400	-	136	532 050 807	535 055 800	536 050 802	537 050 809
	500	-	190	532 050 909	-	536 050 904	537 050 900
	630	-	252	532 051 003	-	536 051 100	537 050 954
	800	-	320	532 051 105	-	-	-
DIN 55026				**Type 3215**	**Type 3515**	**Type 3615**	**Type 3715**
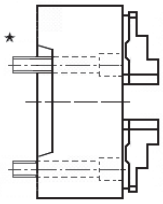	160	*5	42	532 152 500	535 156 004	-	537 152 900
	200	*5	42	532 152 908	535 156 300	-	537 153 208
	200	*6	55	532 153 002	535 156 401	536 153 008	537 153 300
	250	5	76	532 153 206	535 156 605	536 153 201	537 153 401
	250	*6	55	532 153 308	535 156 707	536 153 303	537 153 605
	250	*8	76	532 153 400	535 156 809	536 153 405	537 153 707
	315	6	103	532 153 603	535 157 005	536 153 609	537 153 900
	315	*8	80	532 153 705	535 157 107	536 153 700	537 154 005
	400	6	103	532 153 909	-	536 153 904	537 154 110
	400	8	136	532 154 003	535 157 209	536 154 009	-
	400	*11	130	532 154 118	535 157 313	536 154 113	-
	500	8	136	532 154 207	-	536 154 202	-
	500	11	190	532 154 311	-	536 154 317	-
	630	11	190	532 154 617	-	-	-
	630	*15	190	532 154 719	-	-	-
	800	11	190	532 154 808	-	-	
	800	*15	190	532 155 017	-	-	-
	800	20	320	532 154 900	-	-	-
DIN 55027				**Type 3235**	**Type 3535**	**Type 3635**	**Type 3735**
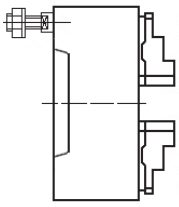	125	3	32**	532 352 108	535 355 700	536 352 103	537 352 100
	125	4	32**	532 352 200	535 355 802	536 352 205	537 352 201
	160	3	42	532 352 301	-	536 352 307	-
	160	4	42	532 352 403	535 356 009	536 352 409	537 352 405
	160	5	42	532 352 505	535 356 100	536 352 500	537 352 507
	160	6	42	532 352 607	-	536 352 602	-
	200	3	51.4	532 352 709	-	536 352 704	-
	200	4	55	532 352 800	-	536 352 806	-
	200	5	55	532 352 902	535 356 304	536 352 908	537 352 904
	200	6	55	532 353 007	535 356 406	536 353 002	537 353 009
	250	6	76	532 353 302	535 356 701	536 353 308	537 353 304
	250	8	76	532 353 404	535 356 803	536 353 400	537 353 406
	315	6	103	532 353 608	535 357 000	536 353 603	537 353 600
	315	8	103	532 353 700	535 357 101	536 353 705	537 353 701
	315	11	103	532 353 801	535 357 114	-	-
	400	6	103	532 353 903	-	536 353 909	-
	400	8	136	532 354 008	535 357 203	536 354 003	537 354 000
	400	11	136	532 354 100	535 357 305	536 354 105	537 354 101
	500	8	136	532 354 201	-	536 354 207	537 354 804
	500	11	190	532 354 303	-	536 354 309	537 354 906
	630	11	190	532 354 609	-	-	537 355 500
	630	15	252	532 354 700	-	-	537 355 601

STANDARD SELF-CENTERING SCROLL CHUCKS

SELF-CENTERING 3 & 4 - JAWS CHUCKS, HARD REVERSIBLE JAWS

	Chuck size	Short taper 1:4	Through hole	3 - jaw chucks		4 - jaw chucks	
				Standard cast iron body	Precision steel body	Standard cast iron body	Precision steel body
				Code No 0642	Code No 0642	Code No 0642	Code No 0642
DIN 55029	**mm**		**mm**	**Type 3245**	**Type 3545**	**Type 3645**	**Type 3745**
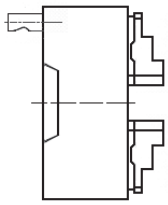	125	3	32**	532 452 105	535 455 708	536 452 100	537 452 107
	125	4	32**	532 452 207	535 455 800	536 452 202	537 452 209
	160	3	42	532 452 309	535 455 901	536 452 304	537 452 300
	160	4	42	532 452 400	535 456 006	536 452 406	537 452 402
	160	5	42	532 452 502	535 456 108	536 452 508	537 452 504
	200	3	51.4	532 452 706	-	536 452 701	-
	200	4	55	532 452 808	535 456 200	536 452 803	537 452 800
	200	5	55	532 452 900	535 456 301	536 452 905	537 452 901
	200	6	55	532 453 004	535 456 403	536 453 000	537 453 006
	250	5	76	532 453 208	-	536 453 203	-
	250	6	76	532 453 300	535 456 709	536 453 305	537 453 301
	250	8	76	532 458 401	535 456 800	536 453 407	537 453 403
	315	6	103	532 453 605	535 457 007	536 453 600	537 453 607
	315	8	103	532 453 707	535 457 109	536 453 702	537 453 709
	315	11	103	532 453 809	535 457 404	-	-
	400	6	103	532 453 900	-	536 453 906	-
	400	8	136	532 454 005	535 457 200	536 454 000	537 454 007
	400	11	136	532 454 107	535 457 302	536 454 102	537 454 109
	500	8	136	532 454 209	-	536 454 204	537 454 608
	500	11	193	532 454 300	-	536 454 306	537 454 700
	630	11	193	532 454 606	-	-	537 455 700
	630	15	240	532 454 708	-	-	537 455 802
				Type 3275	**Type 3575**	**Type 3675**	**Type 3775**
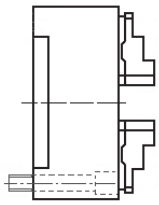	125		32**	532 753 301	535 753 300	-	-
	160		42	532 753 403	535 753 402	536 742 206	537 750 300
	200		55	532 753 505	535 753 504	536 742 308	537 750 402
	250		76	532 753 607	535 753 606	536 742 400	537 750 504
	315		103	532 753 709	535 753 708	536 742 501	537 750 606
	400		136	532 753 800	535 753 800	-	537 750 708
	500		190	532 753 902	-	-	-
	-		-	-	-	-	-

* mounting from front in the inner bolt circle **35,5 dla typu 3500, 3700

Example of order : 3245-160/4 or 0642 532 452 400

SELF-CENTERING 6 - JAWS CHUCKS, HARD REVERSIBLE JAWS

	Chuck size	Through hole	Standard cast iron body	Precision steel body
			Code No 0642	Code No 0642
DIN 6350	**mm**	**mm**	**Type 3805**	**Type 3807**
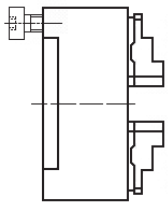	200	55	538 050 306	538 070 302
	250	76	538 050 408	538 070 404
	315	103	538 050 500	538 070 506
	400	136	538 050 601	538 070 608
	500	190	538 050 703	538 070 700
	630	252	538 050 805	538 070 801

Example of order : 3805-200 or 0642 538 050 306

MAIN DIMENSIONS OF CHUCKS TYPE 3100, 3500, 3600, 3700

DIN 6350

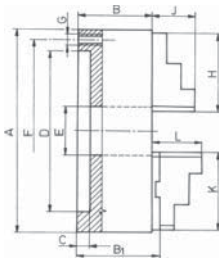

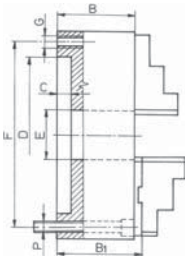

3274, 3275, 3574, 3575

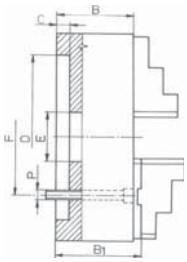

3204 3205-800

PLAIN BACK MOUNTING

Chuck size A		80	85[1]	100	110	125	140	160
B	type 3500, 3700	44	-	50	-	59,5	-	68
	the others	44	44	50	50	56	60	64,5
B1	type 3500, 3700	-	-	-	-	64,3	-	72,8
	the others	-	-	-	-	60,8	64,8	69,3
C		3	3	3	4	4	4	4
D H7		56	62	70	80	95	105	125
E		16	18	20	27	32 | 35,5 [3]	40	42
F		67	72	83	95	108	120	140
G [2]		3xM6	-	3xM8	3xM8	3xM8	3xM8	6xM10
H		32	43	42	42	51	51	70
J		13	13	17	17	20	20	32
K		-	-	-	-	56	56	67
L		-	-	-	-	40	40	43
P		3xM6	3xM6	3xM8	-	3xM8	-	3xM10
weight approx. kg		1,5	1,9	2,8	3,4	5,0	6,0	10,0

Chuck size A		200	250	315	400	500	630	800
B	type 3500, 3700	78	89	97,2	109	119	129	-
	the others	75	85	94	105	120	135	159
B1	type 3500, 3700	82,8	92,8	101,3	116,8	129,8	140,3	-
	the others	79,8	88,8	99,1	113,8	130,8	146,3	170,3
C		4	5	5	5	5	7	20
D H7		160	200	260	330	420	545	450
E		55	76	103	136	190	252	320
F		176	224	286	362	458	586	368,3
G[2]		6xM10	6xM12	6xM16	6xM16	6xM16	6xM16	-
H		85	105	125	145	180	225	225
J		29	34	43	55	60	70	70
K		80	95	110	127	127	127	127
L		45	53	57	67	79	87	87
P		3xM10	3xM12	3xM16	3xM16	6xM16	6xM16	6xM24
weight approx. kg		17,5	29	50	85	145,0	250,0	402

[1] for type 3274 chucks, [2] 3 holes for types 3274, 3275, 3574, 3575, [3] for type 3500, 3700

DIN 55026

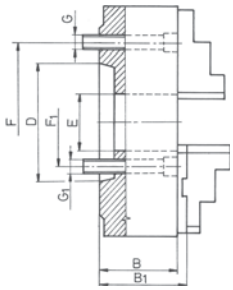

FORM A MOUNTING

Chuck size A		160	200			250			315	
Short taper 1:4		5	4	5	6	5	6	8	6	8
B	type 3500, 3700	68	78			89			96,2	
	the others	81,5	91			103,5			117,7	
B1	type 3500, 3700	72,8	82,8			92,8			101,3	
	the others	86,3	95,8			107,3			122,8	
D	min	82,563	63,513	82,563	106,375	82,563	106,375	139,719	106,375	139,719
	max	82,578	63,526	82,578	106,390	82,578	106,390	139,734	106,390	139,734
E		42	42	42	55	76	55	76	103	80
F1		61,9	-	61,9	82,6	-	82,6	111,1	-	111,1
G1		M10	-	M10	M12	-	M12	M16	-	M16
F		-	82,6	-	-	104,8	-	-	133,4	-
G		-	M10	-	-	M10	-	-	M12	-
qty. of mounting screws	3-jaw	3	3			3	6		6	
	4-jaw	4	4			4			8	4
weight approx. kg		10,0	19,0			32,0			55,0	

Chuck size A		400			500		630		800		
Short taper 1:4		6	8	11	8	11	11	15	11	15	20
B	type 3500, 3700	108			119		129		-		
	the others	128,5			146		165		159		180
B1	type 3500, 3700	116,8			129,8		140,3		-		
	the others	137,3			157,3		175,8		191,3		
D	min	106,375	139,719	196,869	139,719	196,869	196,869	285,775	196,869	285,775	412,775
	max	106,390	139,734	196,887	139,734	196,887	196,887	285,795	196,887	285,795	412,802
	E	103	136	130	136	190	190	190*	190		320
	F1	-	-	165,1	-	-	-	-	-	247,6	-
	G1	-	-	M 20	-	-	-	-	-	M 24	-
	F	133,4	171,4	-	171,4	235	235	330,2	235	-	368,3
	G	M12	M16	-	M16	M20	M20	M24	M20	-	M24
qty. of mounting screws	3-jaw	6			6		6		6		
	4-jaw	8	8	4	4	8	-		-		
weight approx. kg		92,0			160,0		285,0		384,0		

* 252 for chuck type 3500

MAIN DIMENSIONS OF CHUCKS TYPE 3100, 3500, 3600, 3700

DIN 55027 I DIN 55029

BAYONET & CAMLOCK TYPES OF MOUNTING

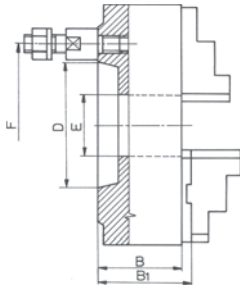

DIN 55027

Chuck size		100	125		160			
Short taper 1:4		3	3	4	3	4	5	6
B	type 3500, 3700	76	59.5		68			
	the others	80	70		81.5			
B1	type 3500, 3700	-	64.8		72.8			
	the others	-	74.8		86.3			
D	min	53.975	53.975	63.513	53.975	63.513	82.563	106.375
	max	53.988	53.988	63.526	53.988	63.526	82.578	106.390
E		20	32		42			
F		75	75	85	75	85	104.8	133.4
F[1]		70.6	70.6	82.6	70.6	82.6	104.8	133.4
qty. of mounting screws	bayonet	3	3	3	3	3	4	4
	camlock	3	3	3	3	3	6	6
weight approx. kg		3.0	5.0		9.0			

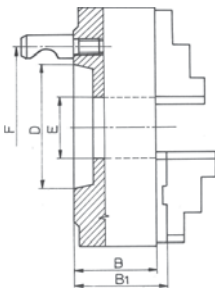

DIN 55029

Chuck size		200				250			315			
Short taper 1:4		3	4	5	6	5	6	8	6	8	11	
B	type 3500, 3700	78				89			96.2		111.7	
	the others	91				103.5			117.7		125	140[1]
B1	type 3500, 3700	82.8				92.8			101.3		116.8	
	the others	95.8				107.3			122.8		130	145[1]
D	min	53.975	63.513	82.563	106.375	82.563	106.375	139.719	106.375	139.719	196.869	
	max	53.988	63.526	82.578	106.390	82.578	106.390	139.734	106.390	139.734	196.887	
E		51.5	55			76			103			
F		75	85	104.8	133.4	104.8	133.4	171.4	133.4	171.4	235	
F[1]		70.6	82.6	104.8	133.4	104.8	133.4	171.4	133.4	171.4	235	
qty. of mounting screws	bayonet	3	3	4	4	4	4	4	4	4	6	
	camlock	3	3	6	6	6	6	6	6	6	6	
weight approx. kg		19.0				32.0			51.0			

Chuck size		400			500		630		
Short taper 1:4		6	8	11	8	11	8	11	15
B	type 3500, 3700	108			119		129		
	the others	128.5			146		165		
B1	type 3500, 3700	116.8			129,8		140,3		
	the others	137.3			156.8		176.3		
D	min	106.375	139.719	196.869	139.719	196.869	139.719	196.869	285.775
	max	106.390	139.734	196.887	139.734	196.887	139.734	196.887	285.795
E		103	136		136	190	136	190	252
F		133.4	171.4	235	171.4	235	-	235	330.2
F[1]		133.4	171.4	235	171.4	235	171.4	235	330.2
qty. of mounting screws	bayonet	4	4	6	4	6	-	6	6
	camlock	6	6	6	6	6	6	6	6
weight approx. kg		101.0			150.0		274.0		

[1] for form Camlock

All other dimensions should be taken from the table about chucks with plain back mounting

DIN 800

THREADED MOUNTING OF CHUCKS - TYPE 3284

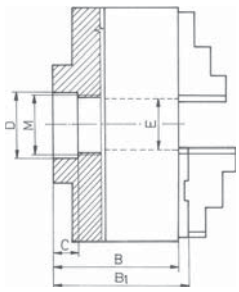

Chuck size A	100
M	M24
B	70
B_1	-
C	14
D	24
E	20
weight approx. kg	3.6

All other dimensions should be taken from the table about chucks with plain back mounting

MAIN DIMENSIONS OF HARD SOLID JAWS AND SOFT SOLID JAWS FOR CHUCKS TYPE 3200, 3500, 3700, 3864

Hard solid inside and outside jaws

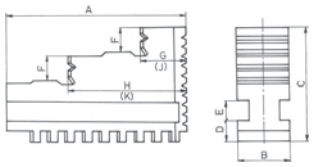

Chuck size		80	85	100	110	125	140	160
A		32	43	42	42	51	51	70
B		11	11	15	15	20	20	20
C		28	28	32	32	40	40	53
D		6	6	6	6	8	8	8
E		6	6	6	6	8	8	8
F		6	6	7	7	8	8	10
G		9.5	10	11	11	13	13	19
H		21	26	27	27	33.5	33.5	45
J		9.5	12	12	12	13	13	22
K		21	26	27.5	27.5	33.5	33.5	47.5
weight approx. kg	hard jaws	0.03	0.07	0.09	0.09	0.18	0.18	0.36
	soft jaws	0.07	-	0.13	0.13	0.26	0.26	0.50

Soft solid jaws

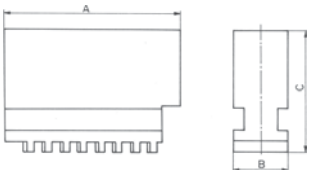

Chuck size		200	250	315	400	500	630	800
A		85	105	125	145	180	225	225
B		25	28	32	36	40	50	50
C		54	63	73	92	100	110	110
D		9	11	12.7	15	16	16	16
E		10	12	12	14	14	14	14
F		12	14	18	22	26	28	28
G		23	28	34.5	36	50	66	66
H		57	69.5	83	99	119.5	149	149
J		23	28	34.5	36	50	66	66
K		57	69.5	83	99	119.5	149	149
weight approx. kg	hard jaws	0.50	0.80	1.32	2.35	3.36	5.80	5.80
	soft jaws	0.80	1.36	1.90	2.46	5.00	8.36	8.36

Dimensions G and H apply to outside jaws
Dimensions J and K apply to inside jaws

MOUNTING DIMENSIONS OF HARD MASTER JAWS FOR CHUCKS TYPE 3100, 3200, 3500, 3600, 3700, 3865

Hard master jaws

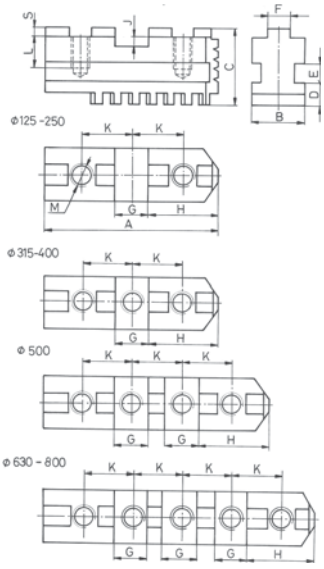

Chuck size	125	140	160	200	250
A	54	54	65	79	92
B	20	20	20	25	28
C	28	28	29	33	36
D	8	8	8	9	11
E	8	8	8	10	12
F - 0.03	7.94	7.94	7.94	7.94	12.7
G + 0.01	12.69	12.69	12.69	12.69	19.04
H	22.6	22.6	28.6	34.9	39.7
J	4	4	4	4	4
K	16	16	19.05	22.25	27
L	13.5	13.5	14	14	16
M	M8 / M6*	M8	M10 / M8*	M10 / M8*	M12
S	3.2	3.2	3.2	3.2	3.2
weight approx. kg	0.14	0.14	0.18	0.30	0.48

Chuck size	315	400	500	630	800
A	110	130	166	210	225
B	32	36	40	50	50
C	40	49	54	54.5	54.5
D	12.7	15	16	16	16
E	12	14	14	14	14
F - 0.03	12.7	12.7	12.7	12.7	12.7
G + 0.01	19.4	19.04	19.04	19.04	19.04
H	47.6	57.1	57.1	57.1	57.1
J	4	7.2	7.2	7.2	7.2
K	31.75	38.1	38.1	38.1	38.1
L	16	22	32.5	32.5	32.5
M	M12	M16	M20	M20	M20
S	3.2	3.2	3.2	3.2	3.2
weight approx. kg	0.77	1.10	2.18	3.34	3.4

* for 3865

MOUNTING DIMENSIONS OF TOP JAWS FOR CHUCKS 3100, 3200, 3500, 3600, 3700, 3865

Hard top jaws

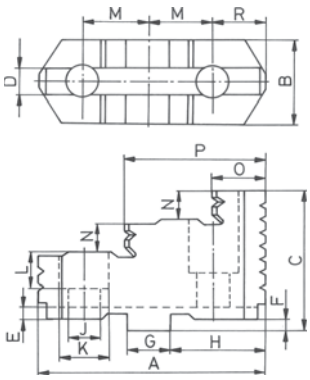

Chuck size		125	140	160	200	250
A		56	56	67	80	95
A1		64	64	78	90	106
B		22	22	25	27	32.5
B do 3100		-	-	40	40	47
C		38.5	38.5	41.5	41.5* / 43.5	51.5
D		7.95	7.95	7.95	7.95	12.71
E		4	4	4	4	4
F		3.2	3.2	3.2	3.2	3.2
G		12.69	12.69	12.69	12.69	19.04
H		22.6	22.6	28.6	34.9	39.7
H1		25	25	34	40	45
J		9 / 6,6**	9	11 / 9**	11 / 9**	14
K		15 / 11**	15	18 / 14**	18 / 14**	20
L		10	10	12	12	14.5
L1		26	26	29	31	38
M		16	16	19.05	22.25	27
N		8	8	8.5	9.5	12
O		14.5	14.5	18	21.5	24.5
P		35	35	41.5	51	59
R		13	13	16	19	22
R1		15	15	21	24	27.5
weight approx. kg	hard jaws	0.17	0.17	0.26	0.36	0.62
	soft jaws	0.30	0.30	0.46	0.65	1.15

* for 3100 ** for 3865

Soft top jaws

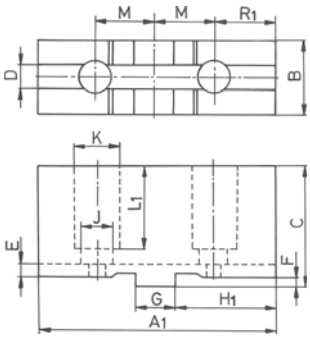

Chuck size		315	400	500	630	800
A		110	127	127	127	127
A1		120	140	140	160	160
B		37	42	42	52	52
B do 3100		52	52	-	-	-
C		55	64.5	74.5	82	82
D		12.71	12.71	12.71	12.71	12.71
E		4	4	41	4	4
F		3.2	6.3	6.3	6.3	6.3
G		19.04	19.04	19.04	19.04	19.04
H		47.6	57.1	57.1	57.1	57.1
H1		53	63	63	63	63
J		14	18	22	22	22
K		20	26	33	33	33
L		14.5	18.5	21	21	21
L1		40	45.5	56	64	64
M		31.75	38.1	38.1	38.1	38.1
N		13	13.5	17	21	21
O		26.5	27	50	51	51
P		68	76.5	88	89	89
R		35.4	28.5	28.5	28.5	28.5
R1		30.7	34.4	34.4	34.4	34.4
weight approx. kg	hard jaws	0.90	1.35	1.55	2.42	2.42
	soft jaws	1.60	2.20	2.40	4.20	4.20

MOUNT BOLTS FOR TOP JAWS

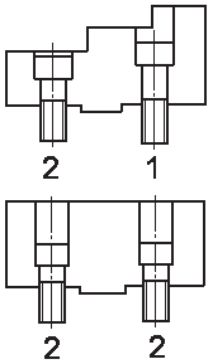

Chuck size	bolt 1		bolt 2	
mm				
125	M8x25	M6x30*	M8x20	M6x20*
140	M8x25	-	M8x20	-
160	M10x30	M8x30*	M10x20	M8x20*
200	M10x30	M8x30*	M10x20	M8x20*
250	M12x40		M12x25	
315	M12x40		M12x25	
400	M16x45		M16x30	
500	M20x75		M20x40	
630	M20x80		M20x40	
800	M20x80		M20x40	

* for 3865

ENGINEERING DATA

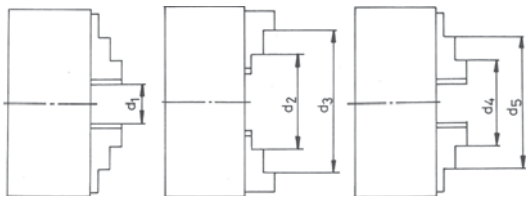

GRIPPING RANGES FOR CHUCKS TYPE 3200, 3500, 3600, 3700

Chuck size		80	85	100	110	125	140	160
Solid jaws	d1	2-27	2-40	3-33	3-33	3-50	3-50	3-64
	d2	25-50	32-70	32-62	32-62	39-83	39-83	50-107
	d3	48-71	64-102	62-93	62-93	80-125	80-125	98-160
	d4	22-46	22-60	25-56	25-56	34-74	34-74	42-100
	d5	45-69	54-92	56-87	56-87	72-115	72-115	94-154
Reversible top jaws	d1	-	-	-	-	3-50	-	3-64
	d2	-	-	-	-	52-96	-	62-121
	d3	-	-	-	-	95-125	-	115-160
	d4	-	-	-	-	34-76		42-97
	d5	-	-		-	75-118	-	88-146
max swing dia		90	121	117	117	151	151	204

Chuck size		200	250	315	400	500	630	800
Solid jaws	d1	4-90	5-118	10-131	10-180	20-235	30-335	150-482
	d2	60-145	77-188	90-215	103-272	140-357	180-487	302-634
	d3	130-200	160-250	190-315	230-400	276-500	345-630	468-800
	d4	52-135	62-174	78-200	85-252	120-335	160-465	282-614
	d5	120-202	145-256	172-299	210-380	245-476	325-630	448-780
Reversible top jaws	d1	4-90	5-118	10-131	10-180	20-235	30-335	150-482
	d2	72-156	86-197	103-226	127-294	110-400	120-570	240-724
	d3	133-200	160-250	190-315	230-400	190-500	200-630	316-800
	d4	50-130	58-165	65-182	72-228	120-410	140-590	252-736
	d5	105-190	125-235	145-265	165-329	200-485	210-665	328-812
max swing dia		246	306	384	472	600	770	940

GRIPPING RANGES FOR CHUCKS TYPE 3864, 3865

Chuck size		125	160	200	250	315	400	500	630
Solid jaws	d1	6-43	8-64	8-90	12-118	12-131	15-202	30-235	40-335
	d2	42-78	52-107	64-145	82-188	95-215	140-308	152-361	192-487
	d3	83-120	102-160	132-200	165-250	192-315	232-400	291-500	358-630
	d4	34-68	47-100	55-135	68-174	82-200	95-280	132-335	175-467
	d5	74-110	98-154	121-202	150-256	178-299	213-400	270-474	340-630
Reversible top jaws	d1	6-43	8-64	8-90	12-118	12-131	15-202	30-235	40-335
	d2	50-87	67-121	74-156	82-188	108-226	132-296	121-402	132-555
	d3	94-125	118-160	134-200	164-250	153-315	236-400	197-478	210-630
	d4	33-70	45-97	52-130	68-174	68-182	73-252	135-413	150-585
	d5	76-119	92-146	109-190	150-256	150-265	169-352	210-489	220-661
max swing dia		151	204	246	306	384	472	600	770

Do not exceed maximum chucking ranges.

MAXIMUM PERMISSIBLE SPEEDS (rpm)

Chuck size	80, 85	100,110	125	140, 160	200	250	315	400	500	630	800
3100*, 3200, 3600	4000	3500	3200	3000	2500	2000	1500	1000	700	500	300
3500, 3700	6000	5200	4800	4500	4000	3500	2800	2000	1200	1000	
3564, 3565		4200	3800	3500	3100	2700	2200	1800	1200	1000	
3864, 3865			3000	2500	2200	1900	1500	1300	800	700	
4505					2500	2000	1500	1000	500	350	
4605					2000	1800	1500	1000	500	350	
4705					3000	2500	2000	1500	1000	750	
4805					2500	2000	1700	1500	1000	750	

* valid for symmetrical gripping of the workpiece

The maximum permissible speed has been fixed so that 1/3 of the gripping force is still available as residual gripping force if the maximum gripping force is applied and the chuck is fitted with its heaviest jaws. The jaws may not project beyond the outside diameter of the chuck. The chuck must be in a perfect condition.
The speed limit for chucks with cast iron bodies is based on the permissible peripherial speed for cast iron.

ENGINEERING DATA

TOTAL GRIPPING FORCE FOR CHUCKS TYPE 3100, 3200, 3500, 3600, 3700, 3800

Chuck size	80, 85	100,110	125	140, 160	200	250	315	400	500	630	800
torque on wrench (Nm)	35	50	75	120	160	180	200	280	360	460	500
total gripping force (daN)	1000	1700	2400	3100 2400*	3700 2900*	4600 3600*	5500 4400*	6500 4900*	7200	8000	9000

* for 3100

The total gripping force is the sum of all jaw forces acting radially on the stationery workpiece. The specified gripping forces are approximate values. They apply to chucks in a perfect condition which have been lubricated with greases recommended in operating instructions.

VALUE OF BALANCING FOR SELF-CENTERING CHUCKS TYPE 3500, 3700

Chuck size	80	100	125	160	200	250	315	400	500	630
gcm	11	16	23	32	45	63	90	140	300	640

CENTRING ACCURACY FOR CHUCKS TYPE 3200, 3500, 3600, 3700

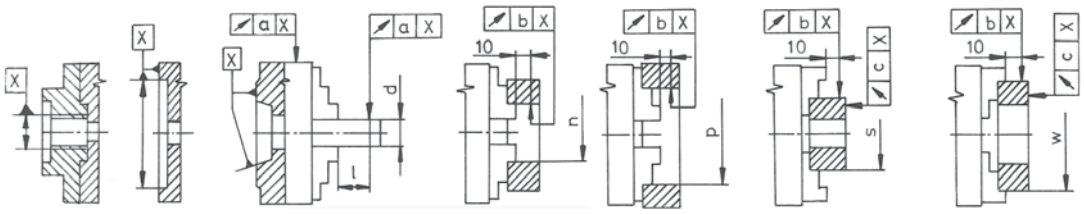

Chuck size	mm	80, 85	100,110	125, 140	160	200	250	315	400	500	630	800
	inch	3 1/4	4	5	6 1/4	8	10	12 1/2	15 3/4	20	25	31 1/2
d		10	10	18	18	30	30	53	53	75	75	160
		-	14	25	30	40	53	75	100	100	125	200
		14	18	30	40	53	75	100	125	125	160	250
l		40	40	60	60	80	80	120	120	160	160	160
n		40	40	50	50	80	80	125	125	200	200	325
p		60	75	100	135	162	200	252	282	282	325	500
s		35	50	62	88	96	150	210	250	300	400	400
w	solid jaws	63	80	100	100	160	160	250	250	400	400	500
	two-piece jaws	-	-	120	150	185	225	300	350	400	400	500

Centering accuracy (mm)

3500 klasa I	a	0.010	0.015	0.020	0.025	0.030	0.050	0.070	
	b	0.013	0.018	0.023	0.028	0.033	0.055	0.075	
	c	0.008	0.010	0.013	0.015	0.015	0.030	0.050	
3500 3700 3800	a	0.020	0.030	0.040	0.050	0.060	0.065	0.070	
	b	0.025	0.035	0.045	0.055	0.065	0.070	0.075	
	c	0.015	0.020	0.025	0.030	0.030	0.040	0.050	
3200 3600	a	0.020	0.030	0.040	0.050	0.060	0.10	0.10	0.15
	b	0.025	0.035	0.045	0.055	0.065	0.10	0.10	0.15
	c	0.015	0.020	0.025	0.030	0.030	0.05	0.05	0.06
3284 3285	a	0.05			0.08				
	b	0.075			0.075				
	c	0.04			0.07				

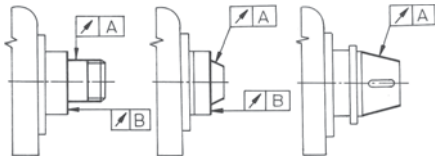

SPINDLE NOSE CENTERING ACCURACY

3500	A, B	Ø 80 - 400	Ø 500 - 630	To obtain the specified centering accuracy of a chuck mounted on a machine tool it is necessary: * to ensure the machine spindle nose runout not to exceed the values specified, * to meet the basic requirements for correct mounting of chuck on the spindle nose, according to the chuck installation instructions.
		0,003 mm	0,005 mm	
3200, 3600, 3700		Ø 80 - 160	Ø 200 - 800	
		0,003 mm	0,005 mm	

SELF- CENTERING CHUCKS WITH FINE ADJUSTMENT - STEEL BODY

Mostly suitable for the machining of parts with top concentricity.
It is for universal use, however particularly advantageous for grinding machines, indexing heads and lathes :

* adjusting accuracy within **0,005 mm**
* repeatability **0,015 mm**

Standard accessories :

Chucks with hard solid jaws :
* 1 set of inside solid jaws
* 1 set of outside solid jaws
* 1 wrench
* 1 hexagonal key
* 1 set of mounting screws

Chucks with hard reversible top jaws :
* 1 set of hard reversible top jaws
* 1 wrench
* 1 hexagonal key
* 1 set of mounting screws

Optional accessories :

Chucks with hard solid jaws :
* 1 set of hard master jaws
* 1 set of hard top jaws

Chucks with hard reversible top jaws :
* 1 set of hard inside solid jaws
* 1 set of hard outside solid jaws

The clamped workpiece is adjusted to the required concentricity by means of 4 (8 for size 400, 500, 630) radially arranged adjusting screws.

Chucks 3564, 3565-500, 630 with T-slots. Chuck and jaw weight in dimension tables.
Spare parts see page 28. Engineering data see page 20, 21. Adapters see page str. 48-53.

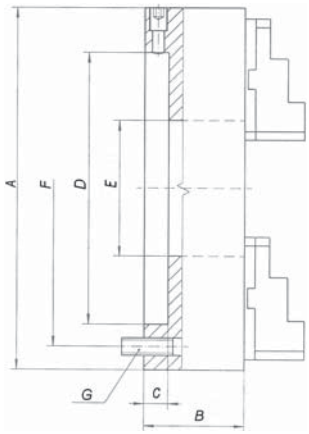

Chuck size	3-jaws hard solid jaws chuck	3-jaws hard reversible top jaws chuck chuck	6-jaws hard solid jaws chuck	6-jaws hard reversible top jaws chuck chuck
	Code No 0642	Code No 0642	Code No 0642	Code No 0642
mm	Type 3564	Type 3565	Type 3864	Type 3865
100	535 640 200	-	-	-
125	535 640 302	535 650 300	538 640 301	538 650 300
160	535 640 404	535 650 402	538 640 403	538 650 401
200	535 640 506	535 650 504	538 640 505	538 650 503
250	535 640 608	535 650 606	538 640 607	538 650 605
315	535 640 700	535 650 708	538 640 709	538 650 707
400	535 640 801	535 650 800	538 640 800	538 650 809
500	535 640 903	535 650 901	538 640 902	538 650 900
630	535 641 008	535 651 006	538 641 007	538 651 005

Chuck size A	B	C	D	E	F	G	weight approx. kg	
mm							3-jaw	6-jaw
100	68	13	45	20	83	3xM8	3.3	4.5
125	71.5	15	55	35	108	3xM8	5.0	6.2
160	68,6	18	86	42	140	3xM10	9.1	10.5
200	78	20	110	55	176	3xM10	15.5	17.5
250	89	20	145	76	224	3xM12	26.2	33.0
315	96.2	20	180	103	286	3xM16	46.5	56.0
400	123	22	299, 237	136	171.5	6xM16	90.0	99.0
500	144	30	407.16	190	235	6xM20x120	171	180
630	150	30	407.16	252	330.2	6xM20x130	302	326

Example of order : 3864-160 or 0642 538 640 403

SELF- CENTERING CHUCKS WITH FINE ADJUSTMENT- CAST IRON BODY

Mostly suitable for the production of parts with top concentricity.
It is for universal use, however particularly advantageous for grinding machines, indexing heads and lathes :

* adjusting accuracy within **0,005 mm**
* repeatability **0,015 mm**
* hardened adjusting spindles
* steel adapter plate

Chucks with hard solid jaws :
* 1 set of inside solid jaws
* 1 set of outside solid jaws
* 1 wrench
* 1 hexagonal key
* 1 set of mounting screws

Chucks with hard solid jaws :
* 1 set of hard master jaws
* 1 set of hard top jaws

The clamped workpiece is adjusted to the required concentricity by means of 3 tangentially arranged adjusting spindles.

Standard accessories :

Chucks with hard reversible top jaws :
* 1 set of hard reversible top jaws
* 1 wrench
* 1 hexagonal key
* 1 set of mounting screws

Optional accessories :

Chucks with hard reversible top jaws :
* 1 set of hard inside solid jaws
* 1 set of hard outside solid jaws

Jaw weight in dimension tables
Spare parts see page 28
Engineering data see page 20, 21

	Chuck size	3-jaws hard solid jaws chuck		3-jaws hard reversible top jaws chuck	
		Code No 0642	weight approx. kg	Code No 0642	weight approx. kg
DIN 6350	**mm**	**Type 3264**		**Type 3265**	
	80	532 640 023	2,8	-	-
	100	532 640 008	3,5	-	-
	125	532 640 100	5,6	532 650 108	6,0
	160	532 640 201	10,0	532 650 200	10,5
	200	532 640 303	17,2	532 650 301	18,0
	250	532 640 405	34,5	532 650 403	36,0
	315	532 640 507	57,5	532 650 505	59,0

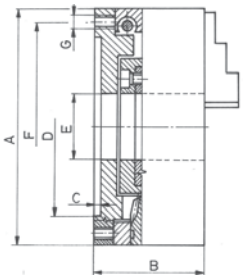

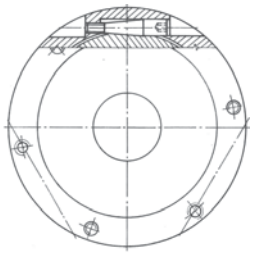

Chuck size A mm	B	C min	D	E min	F	G
80	59	3	56	16	67	3xM6
100	69	4	70	20	83	3xM8
125	70	5	95	32	108	3xM8
160	80,5	5	125	42	140	3xM10
200	91	5	160	55	176	3xM10
250	103	6	200	76	224	3XM12
315	120	6	260	103	286	3xM16

Example of order : 3264-160 or 0642 532 640 201

LEVER SCROLL CHUCKS

Lever scroll chuck si specially designed for grinding twist drills and other cutting tools.
Type 3266 and 3866 with fine adjustment, type 3868 with additional tool support.

Standard accessories:
* 1 set of hard solid jaws
* 1 operating lever
* 1 set of mounting screws

Spare parts see page 28

3 - JAWS

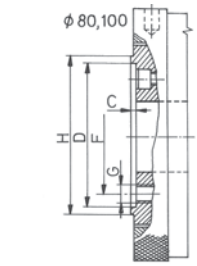

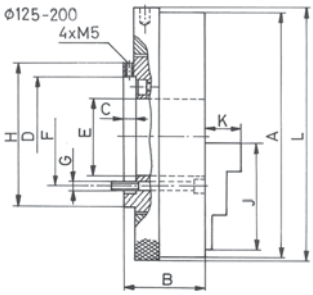

Chuck size	Code No 0642
mm	Type 3266
80	532 660 106
100	532 660 208
125	532 660 300
160	532 660 401
200	532 660 503

A	B	C	D	E	F	G
80	35	1.5	48	24	39	3xM6
100	40	2	75	32	62	3xM8
125	48	8	70	38	56	3xM6
160	52	8	78.5	52	65	3xM6
200	66	13	115	64	84	3xM8

A	H	J	K	L	Camping pin	Weight approx. kg
80	52	35	13	82	6x100	1.1
100	85	42	17	102	6x125	3.2
125	83	51	20	129	8x160	4.0
160	96	70	33	164	8x200	7.3
200	147	85	30	205	8x200	13.3

6 - JAWS

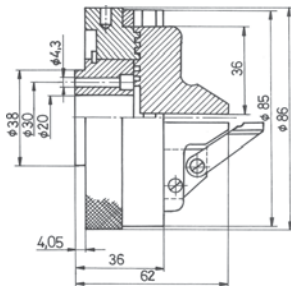

Chuck size	Code No 0642	Clamping pin	Weight approx. kg
mm	Type 3868		
85	538 680 202	6 x 100	2,5

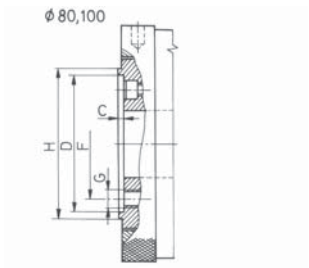

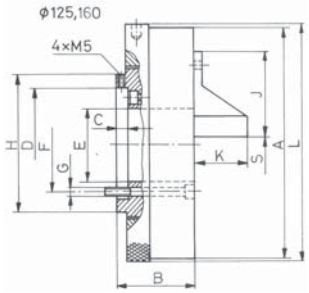

Chuck size	Code No 0642
mm	Type 3866
80	538 660 206
100	538 660 308
125	538 660 400
160	538 660 501

A	B	C	D	E	F	G
80	35	1.5	48	24	39	3xM6
100	40	2	75	32	62	3xM8
125	48	8	70	38	56	3xM6
160	52	8	78.5	52	65	3xM6

A	H	J	K	L	S	Clamping pin	Weight approx. kg
80	52	35	22	82	1-23	6x100	2.0
100	85	42	25	102	1.5-31	6x125	2.8
125	83	50	36	128	2-37	8x160	4.0
160	96	58	36	164	3-51	8x200	7.0

Example of order : 3866-80 or 0642 538 660 206

SCROLL CHUCKS FOR DRILLS SHARPENING

Wrench operated scroll chuck is specially designed for grinding twist drills and other cutting tools. Plain back (front mounting).
Metric and imperial execution of screws is available.

Standard accessories:
* 1 set of hard solid jaws
* 1 wrench
* 1 set of mounting screws

6 - JAWS

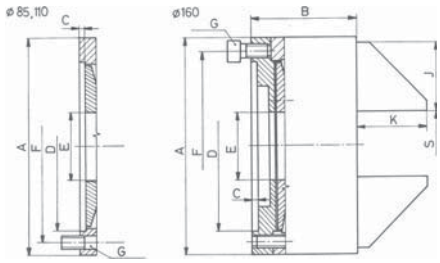

Chuck size	Code No 0642	A	B	C	D
mm	Type 3867				
85	538 670 204	85	44	3.9	62
110	538 670 408	110	50	4	86
160	538 670 601	160	79	4	125

Chuck size mm	E	F	G	J	K	S	Weight approx. kg
85	25.5	70	3xM6	32	37	1-25	1.9
110	32.1	95	3xM6	38	33	2.3-32	3.5
160	51	140	3xM10	51	51	2.5-50	4.5

SPARE PARTS - HARD OUTSIDE JAWS-SET

Chuck size	Code No 0642 for chuck type 3866	Code No 0642 for chuck type 3867	Code No 0642 for chuck type 3868
mm	6-jaw set		
80	985 411 106	-	-
85	-	985 411 605	985 412 107
100	985 411 208	-	-
110	-	985 411 707	-
125	985 411 300	-	-
160	985 411 401	985 411 809	-

5C COLLET CHUCKS

The type 3911 collet chuck designed for use with 5C collets can be used for turning, facing, boring, grinding and milling operations. The simple wrench operated scroll provides a uniform, distortion free clamping of workpieces and low collet exchange times. Type 3960 allows for fine adjustment to the required concentricity by means of 4 radialy arranged adjusting screws.

Standard accessories:
* 1 wrench
* 1 set of mounting screws

Collets on request

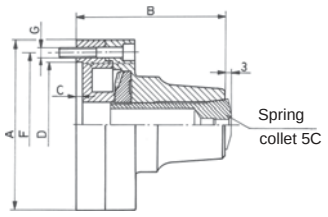

Chuck size	Code No 0642	A	B	C	D	F	G	Weight approx. kg
mm	Type 3911							
125	539 110 307	126	107,5	4	95	108	3xM8x45	4,5

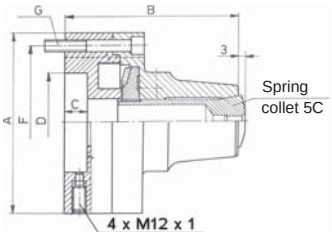

Chuck size	Code No 0642	A	B	C	D	F	G	Weight approx. kg
mm	Type 3960							
125	539 600 305	126	117	15	55	108	3xM8x55	5,4

Example of order : 3960-125-5C or 0642 539 600 305

SELF-CENTERING SCROLL CHUCKS

Special compact design to achieve very small turned diameter. These chucks are suitable for lathes with threaded spindle.

3 - JAWS CHUCKS, HARD REVRSIBLE JAWS, STEEL BODY

3286 - 49

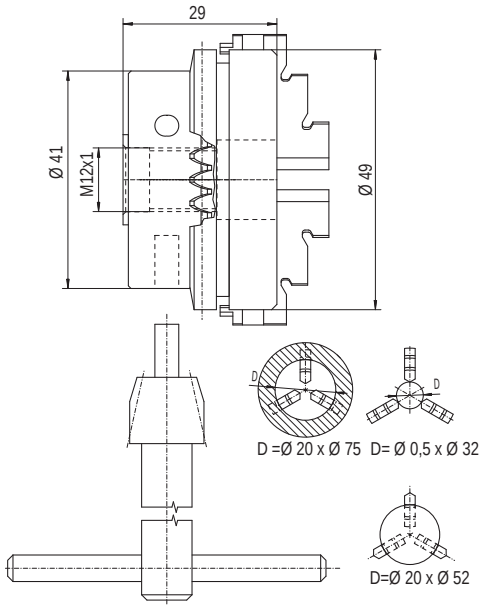

3286 - 60

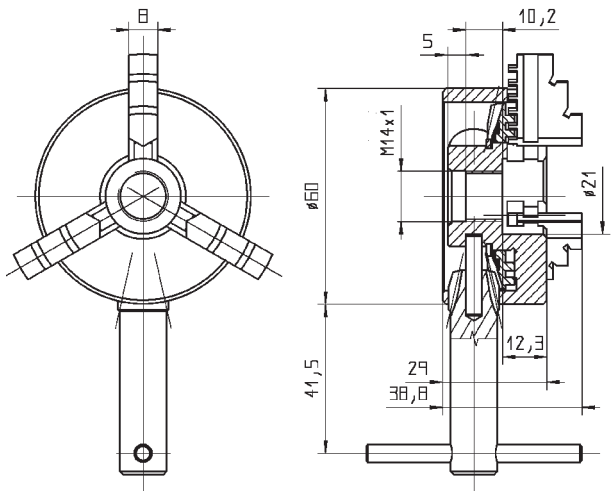

Chuck size	Mounting	Code No 0642	Maximum speed (rpm)	weight approx. kg
Typ 3286				
49	M12x1	532 860 093	4000 min $^{-1}$	0,5
60	M14x1	532 860 100	4000 min $^{-1}$	0,68
Example of order : 3286 - 49 or 0642 532 860 093				

SPARE PARTS

	Code No 0642	
	Type 3286 - 49	Type 3286 - 60
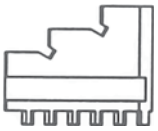 Reversible jaws	985 399 142	985 399 155
Scroll plate	985 399 183	985 399 170
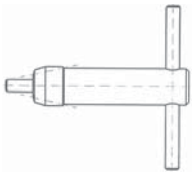 Wrench	985 399 101	

SELF-CENTERING AND INDIVIDUALLY ADJUSTABLE 3 & 4 JAWS CHUCKS

Particularly suitable for lining up and chucking workpieces of irregular shape.

Standard accessories :
* 1 set of hard solid jaws
* 1 wrench
* 1 set of mounting screws

Spare parts see page 28
Engineering data see page 20, 21.

DIN 6351

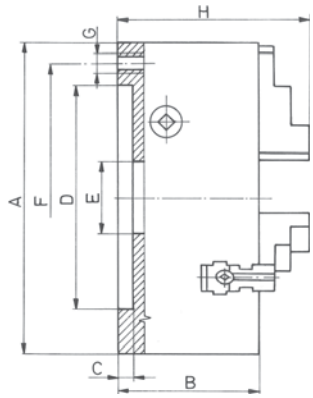

Chuck size	3-jaw chucks		3-jaw chucks	
	Cast iron body	Steel body	Cast iron body	Steel body
	Code No 0642	Code No 0642	Code No 0642	Code No 0642
mm	Type 4505	Type 4705	Type 4605	Type 4805
200	545 050 200	547 055 208	546 050 207	548 055 204
250	545 050 302	547 055 300	546 050 309	548 055 306
315	545 050 404	547 055 401	546 050 400	548 055 408
400	545 050 506	547 055 503	546 050 502	548 055 500
500	545 050 608	547 055 605	546 050 604	548 055 601
630	545 050 700	547 055 707	546 050 706	548 055 703

Example of order : 4505-200 or 0642 545 050 200

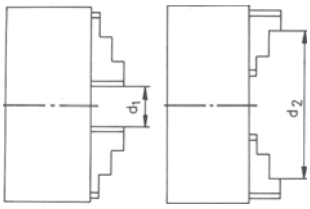

Chuck size A	B	C	D H6	E	F	G	H	Gripping ranges		Weight approx. kg
								d1 min	d2 max	
200	96	5.5	160	55	176	6xM10	127	4	200	18.5
250	102	6	200	76	224	6xM12	135	5	250	31
315	117	6	260	103	286	6xM16	158.5	10	315	54.5
400	123	6.3	330	136	362	6xM16	182	15	400	88
500	145	8	420	190	458	6xM16	206	20	500	150
630	160	10	545	252	586	6xM16	232	30	630	245

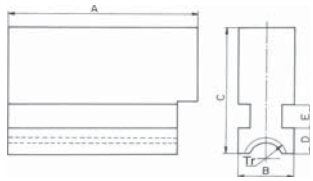

Soft solid jaws

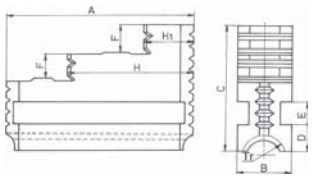

Hard solid jaws

MAIN DIMENSIONS OF HARD SOLID AND SOFT SOLID JAWS

Chuck size	200	250	315	400	500	630
A	85	91	125	145	180	225
B	25	28	32	36	40	50
C	58	61	73	90	100	108
D	11	10	13.5	12	15	14
E	10	10	12	14	14	14
F	12	14	18	22	26	28
Tr left-hand	Tr 18 x 2	Tr 18 x 2	Tr 24 x 3	Tr 24 x 3	Tr 26 x 3	Tr 26 x 3
H1	25	26.5	27	35	49.7	65
H	56	60	76	98.2	119.3	148
Weight approx. kg	0.55	0.76	1.60	1.80	3.85	4.50

SPARE PARTS FOR SELF-CENTERING LATHE CHUCKS

HARD OUTSIDE SOLID JAWS - SETS [1)]

Chuck size		Code No 0642	Code No 0642	Code No 0642	Code No 0642
		For chuck type 3200, 3500	For chuck type 3600, 3700	For chuck type 3864	For chuck type 3266
mm	inch	3-jaw set	4-jaw set	6-jaw set	3-jaw set
80	3 1/4	985 350 009	-	-	985 350 024
100	4	985 350 100	985 381 970*	-	985 350 126
110	4 1/4	985 352 306	985 389 704	-	-
125	5	985 350 202	985 390 205	985 400 209	985 350 228
140	5 1/2	985 352 601	985 389 806	-	-
160	6 1/4	985 350 304	985 390 307	985 400 300	985 350 304
200	8	985 350 406	985 390 409	985 400 402	985 350 406
250	10	985 350 508	985 390 500	985 400 504	-
315	12 1/2	985 350 600	985 390 602	985 400 606	-
400	15 3/4	985 350 701	985 390 704	985 400 708	-
500	20	985 350 803	985 390 806	985 400 800	-
630	25	985 350 905	985 390 819	985 349 009	-
800	31 1/2	985 352 000	-	-	-

* for 3700

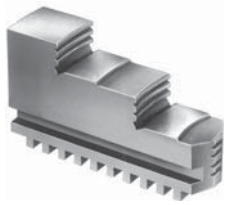

HARD INSIDE SOLID JAWS - SETS [1)]

Chuck size		Code No 0642	Code No 0642	Code No 0642	Code No 0642
		For chuck type 3200, 3500	For chuck type 3600, 3700	For chuck type 3864	For chuck type 3266
mm	inch	3-jaw set	4-jaw set	6-jaw set	3-jaw set
80	3 1/4	985 351 000	-	-	985 351 025
100	4	985 351 101	985 381 982 *	-	985 351 127
110	4 1/4	985 352 408	985 391 909	-	-
125	5	985 351 203	985 391 206	985 401 200	985 351 229
140	5 1/2	985 352 703	985 392 003	-	
160	6 1/4	985 351 305	985 391 308	985 401 301	985 351 305
200	8	985 351 407	985 391 400	985 401 403	985 351 407
250	10	985 351 509	985 391 501	985 401 505	-
315	12 1/2	985 351 600	985 391 603	985 401 607	-
400	15 3/4	985 351 702	985 391 705	985 401 709	-
500	20	985 351 804	985 391 807	985 401 800	-
630	25	985 351 906	985 391 810	985 351 975	-
800	31 1/2	985 352 102	-	-	-

* for 3700

SOFT SOLID JAWS - SETS

Chuck size		Code No 0642	Code No 0642	Code No 0642
		For chuck type 3200, 3500	For chuck type 3600, 3700	For chuck type 3864
mm	inch	3-jaw set	4-jaw set	6-jaw set
80	3 1/4	985 360 007	-	-
100	4	985 360 109	985 398 100 *	-
110	4 1/4	985 352 500	985 398 009	-
125	5	985 360 200	985 398 202	985 402 200
140	5 1/2	985 352 805	985 397 904	-
160	6 1/4	985 360 302	985 398 304	985 402 302
200	8	985 360 404	985 398 406	985 402 404
250	10	985 360 506	985 398 508	985 402 506
315	12 1/2	985 360 608	985 398 600	985 402 608
400	15 3/4	985 360 700	985 398 701	985 402 700
500	20	985 360 801	985 398 803	985 402 801
630	25	985 360 903	985 398 905	985 402 903
800	31 1/2	985 360 929	-	-

* for 3700

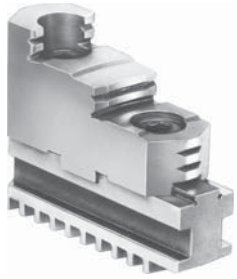

HARD 2-PIECE REVERSIBLE JAWS - SETS[1)]

Chuck size	Code No 0642	Code No 0642	Code No 0642
	For chuck type 3200, 3500	For chuck type 3600, 3700	For chuck type 3865
mm	3-jaw set	4-jaw set	6-jaw set
125	985 353 205	985 392 207	985 403 201
160	985 353 307	985 392 309	985 403 303
200	985 353 409	985 392 400	985 403 405
250	985 353 500	985 392 502	985 403 507
315	985 353 602	985 392 604	985 403 609
400	985 353 704	985 392 706	985 403 700
500	985 353 806	985 392 808	985 403 802
630	985 353 908	985 392 900	985 403 904
800	985 354 002	-	-

SPARE PARTS FOR SELF-CENTERING LATHE CHUCKS

HARD TOP JAWS - SETS [1)]

Chuck size		Code No 0642	Code No 0642	Code No 0642
		For chuck type 3200, 3500	For chuck type 3600, 3700	For chuck type 3865
mm	inch	3-jaw set	4-jaw set	6-jaw set
125	5	985 328 205	985 378 206	985 408 206
160	6 1/4	985 328 307	985 378 308	985 408 308
200	8	985 328 409	985 378 400	985 408 400
250	10	985 328 500	985 378 501	985 408 501
315	12 1/2	985 328 602	985 378 603	985 408 603
400	15 3/4	985 328 704	985 378 705	985 408 705
500	20	985 328 806	985 378 807	985 408 807
630	25	985 328 908	985 378 909	985 408 909
800	31 1/2	985 328 908	-	-

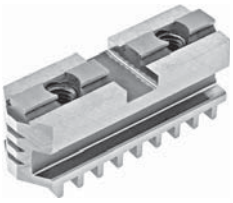

HARD MASTER JAWS - SETS [1)]

Chuck size	Code No 0642	Code No 0642	Code No 0642	Code No 0642	Code No 0642
	For chuck type 3100	For chuck type 3200, 3500	For chuck type 3600, 3700	For chuck type 3865	For chuck type 3295
mm	2-jaw set	3-jaw set	4-jaw set	6-jaw set	3-jaw set
125	-	985 357 209	985 396 200	985 409 207	-
160	985 307 106	985 357 300	985 396 302	985 409 309	-
200	985 307 208	985 357 402	985 396 404	985 409 400	-
250	985 307 300	985 357 504	985 396 506	985 409 502	-
315	985 307 401	985 357 606	985 396 608	985 409 604	-
400	985 307 900	985 357 708	985 396 700	985 409 706	985 399 860
500	-	985 357 800	985 396 801	985 409 808	985 399 873
630*	-	985 357 901	985 396 814	985 409 900	985 399 886
800	-	985 358 006	-	-	-

* for 3295 - 660

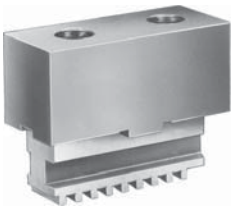

type 3865

SOFT 2-PIECE JAWS - SETS

Chuck size	Code No 0642	Code No 0642	Code No 0642	Code No 0642
	For chuck type 3100	For chuck type 3200, 3500	For chuck type 3600, 3700	For chuck type 3865
mm	2-jaw set	3-jaw set	4-jaw set	6-jaw set
125	-	985 355 207	985 394 209	985 405 216
160	985 300 100	985 355 309	985 394 300	985 405 318
200	985 300 201	985 355 400	985 394 402	985 405 410
250	985 300 303	985 355 502	985 394 504	985 405 511
315	985 300 405	985 355 604	985 394 606	985 405 613
400	985 301 100	985 355 706	985 394 708	985 405 715
500	-	985 355 808	985 394 800	985 405 804
630	-	985 355 900	985 394 901	985 356 017
800	-	985 356 004	-	-

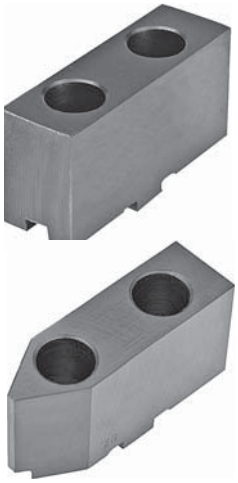

SOFT TOP JAWS - SETS

Chuck size		Code No 0642	Code No 0642	Code No 0642	Code No 0642
		For chuck type 3100	For chuck type 3200, 3500	For chuck type 3600, 3700	For chuck type 3865
mm	inch	2-jaw set	3-jaw set	4-jaw set	6-jaw set
125	5	-	985 330 206	985 382 209	985 407 220
160	6 1/4	985 305 308	985 330 308	985 382 300	985 407 322
200	8	985 305 400	985 330 400	985 382 402	985 407 424
250	10	985 305 501	985 330 501	985 382 504	985 407 526
315	12 1/2	985 305 603	985 330 603	985 382 606	985 407 628
400	15 3/4	985 305 705	985 330 705	985 382 708	985 407 720
500	20	-	985 330 807	985 382 800	985 407 806 *
630	25	-	985 330 909	985 382 901	985 407 908 *
800	31 1/2	-	985 330 909	-	-

* not bevelled

[1)] Hard jaws, supplied as supplement or as spares, must be ground on the chuck, otherwise centering accuracy does not conform the limmits.
This job can be done in BISON plant at extra charge.
In case of a subsequent jaw delivery please return the chuck.

SPARE PARTS FOR SELF-CENTERING LATHE CHUCKS

STUD BOLT

Chuck size		Code No 0642	Chuck size		Code No 0642
mm	cale	For chuck type 3100, 3200, 3600, 4500, 4600, 4700, 4800	mm	inch	For chuck type 3100, 3200, 3600, 4500, 4600, 4700, 4800
80	3 1/4	985 335 109	315	12 1/2	985 335 404
100	4	985 335 109	400	15 3/4	985 335 700
125	5	985 335 200	500	20	985 335 700
160	6 1/4	985 335 200	630	25	985 335 700
200	8	985 335 404	800	31 1/2	985 335 700
250	10	985 335 404			

PINION

Chuck size		Code No 0642	Code No 0642	Code No 0642
mm	inch	For chuck type 3100, 3200, 3600, 4500, 4600, 4700, 4800	For chuck type 3500, 3700, 3800	For chuck type 3295
80	3 1/4	985 334 006	985 334 006	-
100	4	985 334 108	985 334 108	-
110	4 1/4	985 333 800	-	-
125	5	985 334 200	985 362 202	-
140	5 1/2	985 333 901	-	-
160	6 1/4	985 334 301	985 362 304	-
200	8	985 334 403	985 362 406	-
250	10	985 334 505	985 362 508	-
315	12 1/2	985 334 607	985 362 600	-
400	15 3/4	985 334 709	985 362 701	985 399 613
500	20	985 334 800	985 362 803	985 399 626
630*	25*	985 334 902	985 362 905	985 399 639
800	31 1/2	985 335 007	-	-

* for 3295 - 660 (26"")

SCROLL PLATE

Chuck size		Code No 0642	Code No 0642	Code No 0642
mm	inch	For chuck type 3100, 3200, 3600, 4500, 4600, 4700, 4800	For chuck type 3500, 3700, 3800	For chuck type 3295
80	3 1/4	985 361 008	985 361 010	-
100	4	985 361 100	985 361 112	-
110	4 1/4	985 366 705	-	-
125	5	985 367 207	985 361 201	-
140	5 1/2	985 366 807	-	-
160	6 1/4	985 367 309	985 361 303	-
200	8	985 367 400	985 361 405	-
250	10	985 367 502	985 361 507	-
315	12 1/2	985 367 604	985 361 609	-
400	15 3/4	985 367 706	985 361 700	985 399 715
500	20	985 367 808	985 361 726	985 399 728
630*	25*	985 367 900	985 361 741	985 399 730
800	31 1/2	985 367 003	-	-

* for 3295 - 660 (26"")

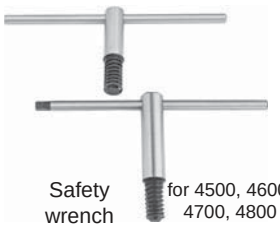

Safety wrench for 4500, 4600, 4700, 4800

Locking half-ring

Sleeve bearing

		SAFETY WRENCH		LOCKIN HALF-RING	SLEEVE BEARING
Chuck size		Code No 0642	Code No 0642	Code No 0642	Code No 0642
mm	inch	For chuck type 3100, 3200, 3500, 3600, 3700, 3800	For chuck type 4500, 4600, 4700, 4800	For chuck type 3500, 3700, 3800	For chuck type 3500, 3700, 3800
80	3 1/4	985 340 102	-	-	-
85	3 3/8	985 340 102	-	-	-
100	4	985 340 204	-	-	-
110	4 1/4	985 340 204	-	-	-
125	5	985 340 204	-	985 363 203	985 364 204
140	5 1/2	985 340 306	-	-	-
160	6 1/4	985 340 306	-	985 363 305	985 364 306
200	8	985 340 306	985 754 001	985 363 407	985 364 408
250	10	985 340 408	985 754 014	985 363 509	985 364 500
315	12 1/2	985 340 408	985 754 103	985 363 600	985 364 601
400	15 3/4	985 340 500	985 754 205	985 363 702	985 364 703
500	20	985 340 601	985 754 307	985 363 804	985 364 805
630	25	985 340 601	985 754 307	985 363 906	985 364 907
800	31 1/2	985 340 703	-	-	-

SPARE PARTS FOR SELF-CENTERING LATHE CHUCKS

ADJUSTING SPINDLE

Chuck size		Code No 0642
mm	inch	For chuck type 4500, 4600, 4700, 4800
200	8	985 751 100
250	10	985 751 202
315	12 1/2	985 751 304
400	15 3/4	985 755 104
500	20	985 755 206
630	25	985 755 308

HARD MASTER JAW - SETS

Chuck size		Code No 0642	Code No 0642
		For chuck type 4500, 4700	For chuck type 4600, 4800
mm	inch	3-jaw set	4-jaw set
200	8	985 752 305	985 753 408
250	10	985 752 407	985 753 500
315	12 1/2	985 752 509	985 753 601
400	15 3/4	985 756 502	985 758 107
500	20	985 756 604	985 758 209
630	25	985 756 706	985 758 300

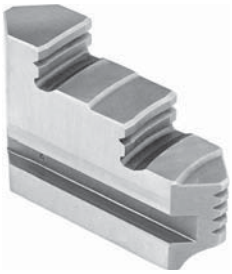

HARD SOLID REVERSIBLE JAW - SETS

Chuck size		Code No 0642	Code No 0642
		For chuck type 4500, 4700	For chuck type 4600, 4800
mm	inch	3-jaw set	4-jaw set
200	8	985 751 508	985 752 600
250	10	985 751 600	985 752 702
315	12 1/2	985 751 701	985 752 804
400	15 3/4	985 755 501	985 757 106
500	20	985 755 603	985 757 208
630	25	985 755 705	985 757 300

SOFT SOLID JAW - SETS

Chuck size		Code No 0642	Code No 0642
		For chuck type 4500, 4700	For chuck type 4600, 4800
mm	inch	3-jaw set	4-jaw set
200	8	985 751 905	985 753 000
250	10	985 752 000	985 753 102
315	12 1/2	985 752 101	985 753 204
400	15 3/4	985 756 105	985 757 503
500	20	985 756 207	985 757 605
630	25	985 756 309	985 757 707

MOUNTING BOLTS FOR LATHE CHUCKS TYPES 3100, 3200, 3500, 3600, 3700, 4300 AND FOR ADAPTERS PLATE TYPES 8200

STUD AND LOCKNUT - DIN 55027

Thread of stud	Taper size 1 : 4	pcs/set	Code No 0642 [1]
M10x34	3	3	985 821 103
M10x39	4	3	985 821 205
M10x43	5	4	985 821 307
M12x50	6	4	985 821 409
M16x60	8	4	985 821 500
M20x75	11	6	985 821 602
M24x90	15	6	985 821 704

STUD FOR CAMLOCK - DIN 55029

Thread of stud for camlock	Taper size 1 : 4	pcs/set	Code No 0642 [1]
M10x1-35	3	3	985 825 107
M10x1-37	4	3	985 825 209
M12x1-43	5	6	985 825 300
M16x1.5-49	6	6	985 825 402
M20x1.5-55.5	8	6	985 825 504
M22x1.5-67	11	6	985 825 606
M24x1.5-76	15	6	985 825 708
M27x2-89	20	6	985 825 800

[1] for one piece

Example of order : Stud for DIN 55027 M12x50 or 0642 985 821 409

SELF-CENTERING 3-JAW WEDGE BAR CHUCKS, HARD SOLID JAWS

Jaw locking system, steel body, jaw guides hardened and ground [1].
For turning work demanding high concentricity reliable repeatability with large gripping forces.

Standard accessories:
* 1 set of hard solid jaws
* 1 wrench
* 1 set of mounting screws

Optional accessories:
* 1 set of hard sectional jaws

Jaw weight in dimensions tables
Spare parts see page 35
Engineering data see page 34

SELF-CENTERING 3-JAW WEDGE BAR CHUCKS, HARD SOLID JAWS

	Chuck size mm	Short taper 1:4	B	Weight approx. kg	Code No 0642		Chuck size mm	Short taper 1:4	B	Weight approx. kg	Code No 0642
	Type 3404					DIN 55026	Type 3414				
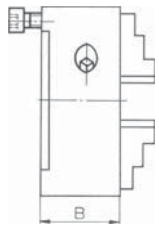	125	-	67	5,6	534 040 302	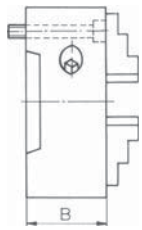	160	4	84,5	11	534 140 300
	160	-	84	11,8	534 040 404		160	5	92	13	534 140 401
	200	-	97	20	534 040 506		200	5	99	21	534 140 503
	250	-	112	36	534 040 608		200	6	105	22	534 140 605
	315	-	127	60	534 040 700		250	6	117	35,5	534 140 809
							250	8	122	36,7	534 140 900
							315	8	136	64	534 141 107
							315	11	139	65,5	534 141 209
DIN 55027	Type 3434					DIN 55029	Type 3444				
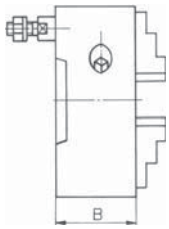	125	3	70	5,9	534 340 100	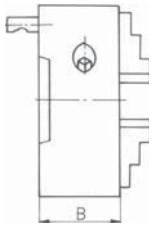	125	3	70	5,9	534 440 108
	125	4	74	6,3	534 340 202		125	4	74	6,3	534 440 200
	160	4	84,5	11,4	534 340 304		160	4	84,5	11,4	534 440 301
	160	5	92	13	534 340 406		160	5	92	13	534 440 403
	200	5	99	21,4	534 340 508		200	5	99,5	21,4	534 440 505
	200	6	105	22,8	534 340 600		200	6	105	22,8	534 440 607
	250	6	117	35,5	534 340 803		250	6	126	39	534 440 800
	250	8	122	36,7	534 340 905		250	8	129	40,3	534 440 902
	315	8	136	64	534 341 101		315	8	142	66	534 441 109
	315	11	139	66,5	534 341 203		315	11	144	68	534 441 200

Example of order : 3444-315/11 or 0642 534 441 200

MAIN DIMENSIONS OF WEDGE BAR CHUCKS

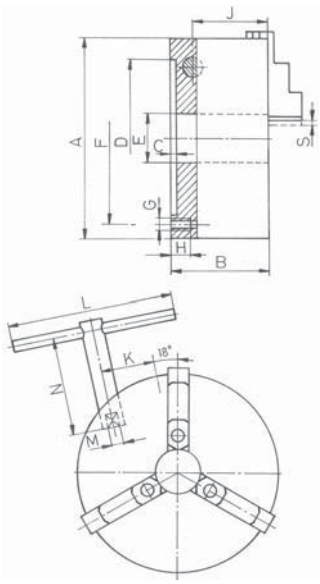

Chuck size	125	160	200	250	315
A	130	165	205	252	315
B	67	84	97	112	127
C	4	5	5	6	6
D	95	125	160	200	260
E	30	40	51	66	90
F	108	140	176	224	286
G	3xM8	3xM10	3xM12	3xM16	3xM18
H	16	17	20	24	30
J	51.5	65	73.5	84.5	95.5
K	35.5	45.5	56.5	72	88
L	150	200	290	440	500
M	9	11	14	16	18
N	125	130	149	173	219
S	5.2	5.2	5.6	6.2	9.1

MAIN JAWS DIMENSIONS FOR WEDGE BAR CHUCKS

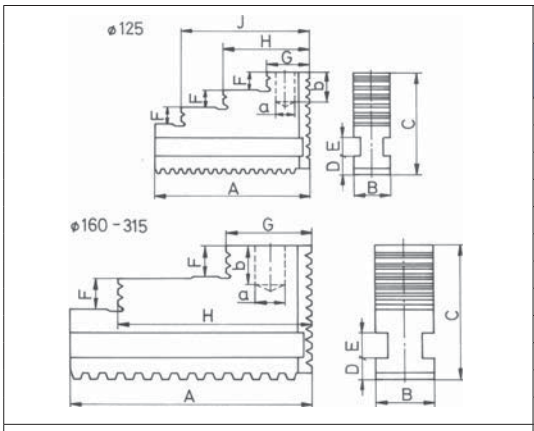

HARD SOLID REVERSIBLE JAWS

Chuck size	125	160	200	250	315
A	58	69	90	108.5	132
B	14	20	22	26	32
C	40	45	50	60	70
D	6.5	7.5	8	10	12
E	7	9	9	11	14
F	7	8	11.5	14	17
G	16	26	33	36	41.5
H	32	58	72.5	83	104.5
J	48	-	-	-	-
a	8	10	12	15	20
b	12	12	15	20	20
Weight approx. kg	0.4	1.0	1.5	2.6	4.4

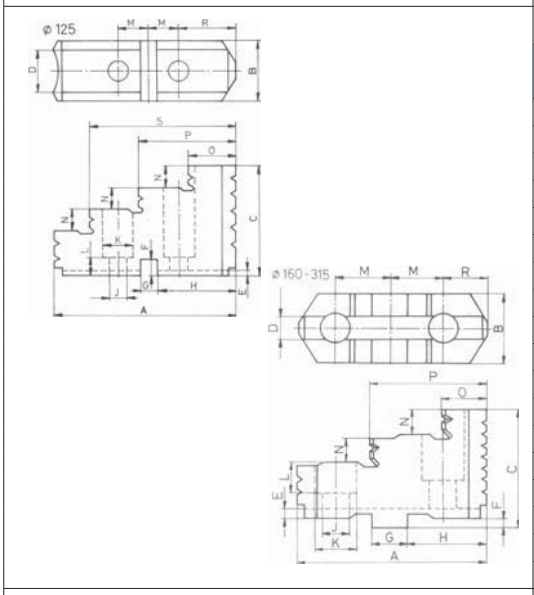

HARD TOP JAWS

Chuck size	125	160	200	250	315
A	59	63	72.5	91	105
B h11	20	20	22	30	35
C	36	37	43.5	55	60
D H9	14	8	10	12	12
E	1.5	3	3.5	3.5	6.5
F	5	4.5	5	5	5
G h7	5	18	20	20	26
H	26	23	27	30	35.3
J	6.4	8.4	8.4	13	13
K	10.4	13.5	13.5	19	19
L	6	8.5	9.5	26	23.5
M	10	16	20	20	27
N	7	7.5	9.5	14	15
0	16	27	33	40.5	40
P	31	40	58	81	95
R	18.5	16	17	20	21
S	47	-		-	-
Weight approx. kg	0.18	0.25	0.35	0.50	0.80

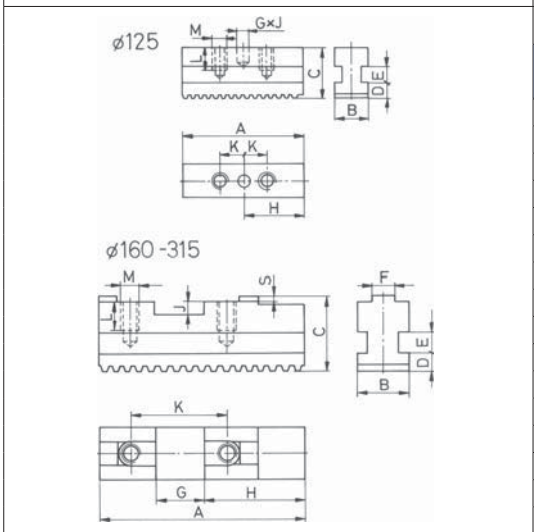

HARD MASTER JAWS

Chuck size	125	160	200	250	315
A	51.5	65	85	87.5	125
B	14	20	22	26	32
C	21.5	26.5	28.5	36	42
D	6.5	7.5	8	10	12
E	7	9	9	11	14
F	-	8	10	12	12
G H7[1)]	5	18	20	20	26
H	25.75	28	42	41.5	69
J	7	5	5.5	5.5	7
K	10	32	40	40	54
L	10	12	12	17	17
M	M6	M8	M8	M12	M12
S	-	2.5	2.5	3	3
Weight approx. kg	0.3	0.6	0.9	1.8	3.0

[1)] H7 without chuck size 125

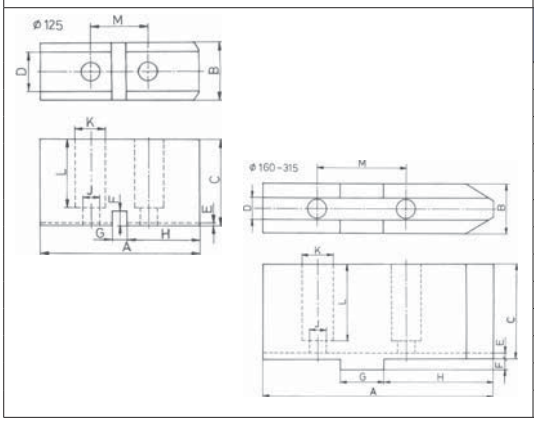

SOFT TOP JAWS

Chuck size	125	160	200	250	315
A	55	85	105	125	145
B	20	20	22	30	35
C	30	40	50	55	60
D H9	14	8	10	12	12
E	1.5	4.5	5	5	6
F	5	3	3	3.5	3.5
G h7	5	18	20	20	26
H	25	35	40	60	60
J	6.4	8.4	8.4	13	13
K	10.4	13.5	13.5	19	19
L	24	26.5	35	41	38
M	20	32	40	40	54
Weight approx. kg	0.6	1.2	2.1	4.2	6.2

ENGINEERING DATA FOR WEDGE BAR CHUCK

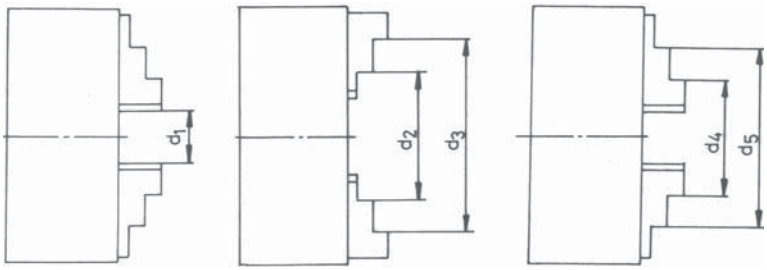

GRIPPING RANGES					
Chuck size	**125**	**160**	**200**	**250**	**315**
d1	4-29	4-90	5-105	8-130	10-155
d2	38-63	61-150	70-170	81-170	95-189
d3	100-125	90-160	100-200	120-250	152-315
d4	28-53	34-120	49-149	66-188	74-200
d5	100-125	90-160	100-200	128-250	142-315
max. swing dia	151	212	264	322	393

MAXIMUM PERMISSIBLE ROTATIONAL SPEEDS (rpm)					
Chuck size	**125**	**160**	**200**	**250**	**315**
max. rpm	4500	4000	3500	3000	2300

TOTAL GRIPPING FORCE					
Chuck size	**125**	**160**	**200**	**250**	**315**
Torque on wrench (Nm)	40	100	160	200	250
Total gripping force (daN)	3000	6000	8500	11000	13000

VALUE OF BALANCING					
Chuck size	**125**	**160**	**200**	**250**	**315**
gcm	16	32	63	125	250

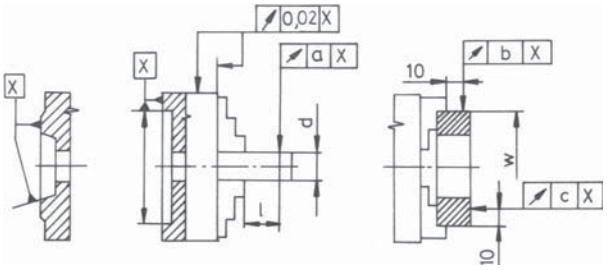

CENTERING ACCURACY					
Chuck size	**125**	**160**	**200**	**250**	**315**
d	14	14	14	15	20
	20	20	22	32	64
	29	39	50	64	89
l	60	60	80	80	120
w	95	95	125	180	189
	125	160	200	245	290
Centering accuracy (mm)					
a	0.015	0.015	0.015	0.015	0.020
b	0.010	0.010	0.010	0.010	0.010
c	0.015	0.015	0.015	0.015	0.020

SPARE PARTS FOR WEDGE BAR CHUCKS

HARD SOLID JAWS - SET

Chuck size mm	Code No 0642
	3 pcs/set
125	985 309 108
160	985 309 200
200	985 309 301
250	985 309 403
315	985 309 505

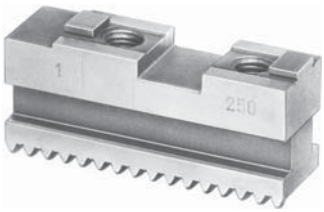

HARD MASTER JAWS - SET

Chuck size mm	Code No 0642
	3 szt./kpl
125	985 309 709
160	985 309 800
200	985 309 902
250	985 310 006
315	985 310 108

SOFT TOP JAWS - SET

Chuck size mm	Code No 0642
	3 pcs/set
125	985 310 301
160	985 310 403
200	985 310 505
250	985 310 607
315	985 310 709

HARD TOP JAWS - SET

Wielkość uchwytu mm	Code No 0642
	3 pcs/set
125	985 310 813
160	985 310 826
200	985 310 839
250	985 310 841
315	985 310 854

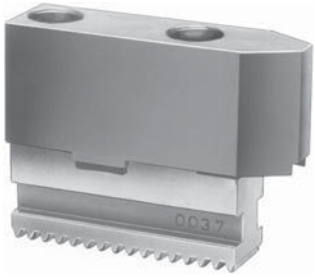

SOFT 2-PIECE JAWS - SET

Chuck size mm	Code No 0642
	3 pcs/set
125	985 312 700
160	985 312 802
200	985 312 904
250	985 312 920
315	985 312 945

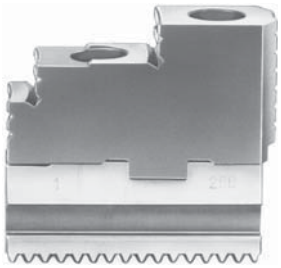

SOFT 2-PIECE REVERSIBLE JAWS - SET

Chuck size mm	Code No 0642
	3 pcs/set
125	985 312 100
160	985 312 201
200	985 312 303
250	985 312 405
315	985 312 507

4-JAW INDEPENDENT CHUCKS

These chucks feature jaws that are individually adjustable, allow firm gripping of odd shaped workpieces, and the four jaws allow a square component to be perfectly centered to the chuck while achieving maximum gripping force. The chuck bodies are made of cast iron or steel. The jaws are made of high quality carbon steel and hardened. Thrust bearings and operating screws are made of case hardened steel. From size 250, with T-slots.
Chucks with high accuracy with grounded grip surface of jaws can be made on special request.

Standard accessories :

Chucks woth one-piece reversible jaws:
* 1 set of solid reversible jaws
* 1 wrench
* 1 set of mounting screws

Chucks woth one-piece reversible jaws:
* 1 set of two-piece reversible jaws
* 1 wrench
* 1 set of mounting screws

Optional accessories :

Chucks woth one-piece reversible jaws:
* 1 set of two-piece reversible jaws

Chucks woth one-piece reversible jaws:
* 1 set of solid reversible jaws

Chuck and jaw weight in dimension tables
Spare parts see page 42
Enineering data see page 41

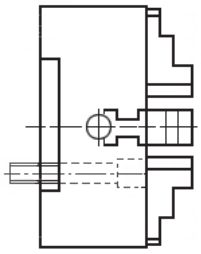

	Chuck size	Through hole	SOLID REVERSIBLE JAWS			TWO-PIECE REVERSIBLE JAWS	
			Cast iron body	Steel body	Cast steel body	Cast iron body	Cast steel body
			Code No 0642	Code No 0642	Code No 0642	Code No 0642	Code No 0642
DIN 6350	**mm**	**mm**	**Type 4304**	**Type 4304**	**Type 4302**	**Type 4305**	**Type 4303**
	85	25	-	543 040 006	-	-	-
	100	25	-	543 040 108	-	-	-
	125	26	-	543 040 200	-	-	-
	160	42	-	543 040 403	-	-	-
	200	50	543 040 505	-	543 020 407	543 050 503	543 030 405
	250	65	543 040 607	-	543 020 509	543 050 605	543 030 507
	315	80	543 040 709	-	543 020 600	543 050 707	543 030 609
	350	80	543 006 304	-	-	-	-
	400	100	543 040 800	-	543 020 702	543 050 809	543 030 700
	500	125	543 040 902	-	543 020 804	543 050 900	543 030 802
	630	160	543 041 007	-	543 020 906	543 051 005	543 030 904
	800	200	543 041 109	-	543 021 000	543 051 107	543 031 009
	915	190	-	-	-	543 051 110	543 031 100
	1000	190	-	-	-	543 051 209	543 031 202
	1250	190	-	-	-	543 051 300	543 031 304

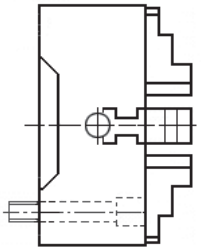

	Chuck size	Short taper 1:4	Through hole	SOLID REVERSIBLE JAWS		TWO-PIECE REVERSIBLE JAWS	
				Cast iron body	Cast steel body	Cast iron body	Cast steel body
				Code No 0642	Code No 0642	Code No 0642	Code No 0642
DIN 55026	**mm**		**mm**	**Type 4314**	**Type 4312**	**Type 4315**	**Type 4313**
	200	4	50	543 140 207	543 120 200	543 152 808	543 130 209
	200	5	50	543 140 309	543 120 302	543 152 900	543 130 300
	200	6	50	543 140 400	543 120 404	543 153 004	543 130 402
	250	4	65	543 140 502	543 120 506	543 153 106	543 130 504
	250	5	65	543 140 604	543 120 608	543 153 208	543 130 606
	250	6	65	543 140 706	543 120 700	543 153 300	543 130 708
	250	8	65	543 140 808	543 120 801	543 153 401	543 130 800
	315	5	80	543 140 900	543 120 903	543 153 503	543 130 901
	315	6	80	543 141 004	543 121 008	543 153 605	543 131 006
	315	8	80	543 141 106	543 121 100	543 153 707	543 131 108
	400	6	100	543 141 208	543 121 201	543 153 900	543 131 200
	400	8	100	543 141 300	543 121 303	543 154 005	543 131 301
	400	11	100	543 141 414	543 121 418	543 154 110	543 131 416
	500	6	125	543 141 503	543 121 507	543 154 402	543 131 505
	500	8	125	543 141 605	543 121 609	543 154 209	543 131 607
	500	11	125	543 141 710	543 121 713	543 154 313	543 131 711
	500	15	125	543 141 811	543 121 815	543 154 710	543 131 813
	630	8	125	543 141 900	543 121 904	543 154 504	543 131 902
	630	11	160	543 142 018	543 122 011	543 154 619	543 132 010
	630	15	160	543 142 110	543 122 113	543 150 014	543 132 111
	800	8	125	543 142 209	543 122 202	543 154 800	543 132 200
	800	11	180	543 142 313	543 122 317	543 154 914	543 132 315
	800	15	200	543 142 415	543 122 419	543 150 116	543 132 417
	800	20	200	543 142 504	543 122 508	543 150 205	543 132 506
	915	11	190	-	-	-	543 132 610
	915	15	190	-	-	-	543 132 712
	1000	11	190	-	-	543 159 114	543 132 842
	1000	15	190	-	-	543 159 216	543 132 855
	1000	20	190	-	-	-	543 132 827
	1250	11	190	-	-	543 159 511	543 133 010
	1250	15	190	-	-	543 159 613	543 133 100
	1250	20	190	-	-	-	543 133 201

4-JAWS INDEPENDENT CHUCKS

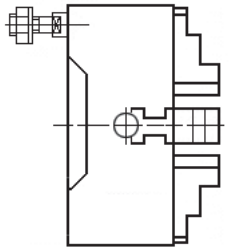

	Chuck size	Short taper 1:4	Through hole	SOLID REVERSIBLE JAWS		TWO-PIECE REVERSIBLE JAWS	
				Cast iron body	Cast steel body	Cast iron body	Cast steel body
				Code No 0642	Code No 0642	Code No 0642	Code No 0642
DIN 55027	**mm**		**mm**	**Type 4334**	**Type 4332**	**Type 4335**	**Type 4333**
	200	4	50	543 340 507	-	543 352 802	-
	200	5	50	543 340 609	543 320 409	543 352 904	543 330 407
	200	6	50	543 340 700	543 320 500	543 353 009	543 330 509
	250	5	65	543 340 802	543 320 704	543 353 202	543 330 600
	250	6	65	543 340 904	543 320 806	543 353 304	543 330 704
	250	8	65	543 341 009	543 320 908	543 353 406	543 330 906
	315	5	80	543 341 100	543 321 104	543 353 508	543 330 908
	315	6	80	543 341 202	543 321 206	543 353 600	543 331 000
	315	8	80	543 341 304	543 321 308	543 353 701	543 331 102
	315	11	80	543 341 317	543 321 400	543 353 803	543 331 204
	400	5	100	543 342 804	543 322 105	543 353 829	543 331 703
	400	6	100	543 341 406	543 322 207	543 353 905	543 331 805
	400	8	100	543 341 508	543 322 309	543 354 000	543 331 907
	400	11	100	543 341 600	543 322 400	543 354 101	543 332 001
	500	6	125	543 341 701	543 322 604	543 354 407	543 332 103
	500	8	125	543 341 803	543 322 706	543 354 203	543 332 205
	500	11	125	543 341 905	543 322 808	543 354 305	543 332 307
	500	15	125	543 342 000	543 322 900	543 351 007	543 332 409
	630	8	125	543 342 101	543 323 106	543 354 509	543 332 500
	630	11	160	543 342 203	543 323 208	543 354 600	543 332 602
	630	15	160	543 342 305	543 323 300	543 351 109	543 332 704
	800	8	125	543 342 407	543 323 401	543 354 804	543 332 806
	800	11	180	543 342 509	543 323 503	543 354 906	543 332 908
	800	15	200	543 342 600	543 323 605	543 351 200	543 333 002
	915	11	190	-	-	-	543 333 308
	915	15	190	-	-	-	543 333 400
	1000	11	190	-	-	-	543 333 603
	1000	15	190	-	-	-	543 333 705
	1000	20	190	-	-	-	543 333 807
	1250	11	190	-	-	-	543 333 909
	1250	15	190	-	-	-	543 334 003
	1250	20	190	-	-	-	543 334 105

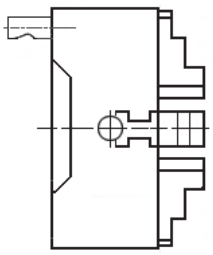

DIN 55029	**mm**		**mm**	**Type 4344**	**Type 4342**	**Type 4345**	**Type 4343**
	160	3	43	543 445 101*	-	-	-
	200	3	50	543 440 606	543 420 009	543 452 708	543 430 007
	200	4	50	543 440 708	543 420 100	543 452 800	543 430 109
	200	5	50	543 440 800	543 420 202	543 452 901	543 430 200
	200	6	50	543 440 812	543 420 304	543 452 006	543 430 302
	250	3	50	543 440 901	543 420 406	543 453 108	543 430 404
	250	4	60	543 441 006	543 420 508	543 453 200	543 430 506
	250	5	65	543 441 108	543 420 600	543 453 301	543 430 608
	250	6	65	543 441 200	543 420 701	543 453 403	543 430 700
	250	8	65	543 441 225	543 420 803	543 453 429	543430 801
	315	5	80	543 441 301	543 420 905	543 453 505	543 430 903
	315	6	80	543 441 403	543 421 000	543 453 607	543 431 008
	315	8	80	543 441 505	543 421 101	543 453 709	543 431 100
	315	11	80	543 441 518	-	-	-
	400	6	100	543 441 607	543 421 203	543 453 902	543 431 201
	400	8	100	543 441 709	543 421 305	543 454 007	543 431 303
	400	11	100	543 441 800	543 421 407	543 454 109	543 431 405
	500	8	125	543 442 007	543 421 600	543 454 200	543 431 609
	500	11	125	543 442 109	543 421 702	543 454 302	543 431 700
	500	15	125	543 442 200	543 421 804	543 454 404	543 431 802
	630	8	125	543 442 302	543 421 906	543 454 506	543 432 904
	630	11	160	543 442 404	543 422 000	543 454 608	543 432 009
	630	15	160	543 442 506	543 421 102	543 454 700	543 432 100
	800	8	125	543 442 608	543 421 204	543 454 801	543 432 202
	800	11	180	543 442 700	543 421 306	543 454 903	543 432 304
	800	15	200	543 442 801	543 421 408	543 455 008	543 432 406
	800	20	200	543 442 903	543 421 500	543 455 100	543 432 508
	915	11	190	-	-	-	543 432 600
	915	15	190	-	-	-	543 432 701
	1000	11	190	-	-	-	543 432 905
	1000	15	190	-	-	-	543 433 000
	1000	20	190	-	-	-	543 433 101
	1250	11	190	-	-	-	543 433 203
	1250	15	190	-	-	-	543 433 305
	1250	20	190	-	-	-	543 433 407

* steel body

Example of order : 4334 - 200/5 or 0642 543 340 609

MAIN DIMENSIONS OF 4-JAW INDEPENDENT CHUCKS

DIN 6350 — PLAIN BACK MOUNTING

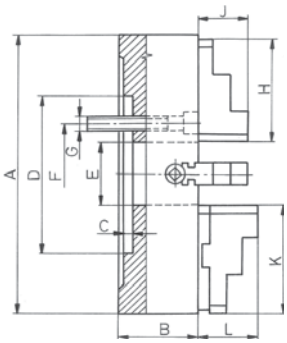

Chuck size	85	100	125	160	200	250	315
A	86	100	130	156	200	250	315
B	40	40	43	43	80	85	95
C	5	2.5	2.5	2.5	5	7	7
D H7	62	79.38	69.85	82.55	110	150	175
E	25	25	26	42	50	65	80
F	72	54	54	69.85	82.6	104.8	133.4
G	4xM6	4xM8	4xM8	4xM10	4xM10	4xM12	4xM16
H	34	34	51	51	81	96.5	111
J	17	17	20	20	40.3	40.3	49.8
L	-	-	-	-	46.4	60.4	60.9
K	-	-	-	-	82	96.5	112.5
Weight approx. kg	1.9	2.4	3.8	4.3	14.0	25.0	39.0

Chuck size	350	400	500	630	800	915	1000	1250
A	350	400	500	630	800	915	1000	1250
B	95	105	120	140	160	170	170	190
C	7	10	12	12	12	18	18	18
D H7	175	200	270	270	380	370	370	550
E	80	100	125	160	200	190	190	190
F	133.4	171.4	235	235	330	330	330	500
G	4xM16	4xM16	4xM20	4xM20	4xM24	8xM24	8xM24	8xM24
H	111	129	152.5	177	202	-	-	-
J	49.8	49.8	59.8	59.8	70.8	-	-	-
L	-	72.3	90.3	97.8	93.8	102.8	102.8	102.8
K	-	129	136	136	136	160	160	160
Weight approx. kg	47.5	61.0	105	163	319	350	410	950

DIN 55026 — FORM A MOUNTING

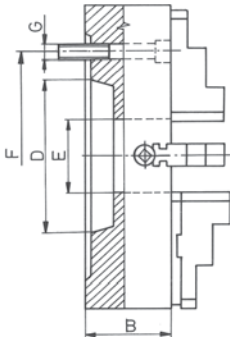

Chuck size	200			250				315		
Short taper 1: 4	4	5	6	4	5	6	8	5	6	8
B	80			85				95		
D min	63.513	82.563	106.375	63.513	82.563	106.375	139.719	82.563	106.375	139.719
D max	63.526	82.578	106.390	63.526	82.578	106.390	139.734	82.578	106.390	139.734
E	50			65				80		
F	82.6	104.8	133.4	82.6	104.8	133.4	171.4	104.8	133.4	171.4
G	4xM10	4xM10	4xM12	8xM10	8xM10	4xM12	4xM16	4xM10	8xM12	4xM16
Weight approx. kg	17.0			25.5				40.0		

Chuck size	400			500				630		
Short taper 1: 4	6	8	11	6	8	11	15	8	11	15
B	105			120				140		
D min	106.375	139.719	196.869	106.375	139.719	196.869	285.775	139.719	196.869	285.775
D max	106.390	139.734	196.887	106.390	139.734	196.887	285.795	139.734	196.887	285.795
E	100			100	125			125	160	
F	133.4	171.7	235	133.4	171.4	235	330.2	171.4	235	330.2
G	8xM12	4xM16	4xM20	4xM12	8xM16	8xM20	4xM24	8xM16	8xM20	4xM24
Weight approx. kg	65			114.0				165.0		

Chuck size	800				915		1000		
Short taper 1: 4	8	11	15	20	11	15	11	15	20
B	160	170	170						
D min	139.719	196.869	285.775	412.775	196.869	285.775	196.869	285.775	412.775
D max	139.734	196.887	285.795	412.802	196.887	285.795	196.887	285.795	412.802
E	125	180	200	200*	190		190		
F	171.4	235	330.2	463.6	235	330.2	235	330.2	463.6
G	4xM16	8xM20	8xM24	4xM24	8xM20	8xM24	8xM20	8xM24	8xM24
Weight approx. kg	305				315.0		395.0		

Chuck size	1250		
Short taper 1: 4	11	15	20
B	190		
D min	196.869	285.775	412.775
D max	196.887	285.795	412.802
E	190		
F	235	330.2	463.6
G	8xM20	8xM24	8xM24
Weight approx. kg	950		

* 320 mm - on request

MAIN DIMENSIONS OF 4-JAW INDEPENDENT CHUCKS

DIN 55027 AND DIN 55029

BAYONET & CAMLOCK TYPES OF MOUNTING

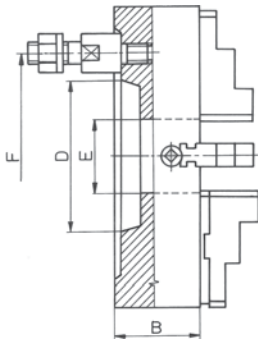

DIN 55027

Chuck size		160	200				250				
Short taper 1 : 4		3	3	4		5	6	3	4	5	6	8
B		54	80					85				
D max		53.988	53.988	63.526		82.578	106.390	53.988	63.526	82.578	106.390	139.734
D min		53.975	53.975	63.513		82.563	106.375	53.975	63.513	82.563	106.375	139.719
E		42	50					50	60	65		
F		70.6	70.6	85[1)]	82.6	104.8	133.4	70.6	82.6	104.8	133.4	171.4
qty.of mounting studs	Bayonet	-	-		3	4	4	-	-	4	4	4
	Camlock	3	3		3	6	6	3	3	6	6	6
Weight approx. kg		6.0	16.5					27.5				

Chuck size		315				400			
Short taper 1 : 4		5	6	8	11	5	6	8	11
B		95				105			
D max		82.578	106.390	139.734	196.887	82.578	106.390	139.734	196.887
D min		82.563	106.375	139.719	196.869	82.563	106.375	139.719	196.869
E		80				79.5	100		
F		104.8	133.4	171.4	235	104.8	133.4	171.4	235
qty.of mounting studs	Bayonet	4	4	4	6	4	4	4	6
	Camlock	6	6	6	6	6	6	6	6
Weight approx. kg		39.5				60.0			

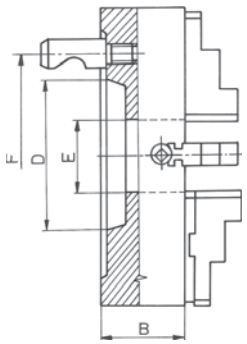

DIN 55029

Chuck size		500				630			800			
Short taper 1 : 4		6	8	11	15	8	11	15	8	11	15	20
B		120				140			160			
D max		106.390	139.734	196.887	285.795	139.734	196.887	285.795	139.734	196.887	285.795	412.802
D min		106.375	139.719	196.869	285.775	139.719	196.869	285.775	139.719	196.869	285.775	412.775
E		100	125			125	160		125	180	200	
F		133.4	171.4	235	330.2	171.4	235	330.2	171.4	235	330.2	463.6
qty.of mounting studs	Bayonet	4	4	6	6	4	6	6	4	6	6	6
	Camlock	6	6	6	6	6	6	6	6	6	6	6
Weight approx. kg		95.5				165.0			298.0			

Chuck size		915		1000			1250	
Short taper 1 : 4		11	15	11	15	20	11	15
B		170		170			190	
D max		196.887	285.795	196.887	285.795	412.802	196.887	285.795
D min		196.869	285.775	196.869	285.775	412.775	196.869	285.775
E		190		190			190	
F		235	330.2	235	330.2	463.6	235	330.2
qty.of mounting studs	Bayonet	6	6	6	6	6	6	6
	Camlock	6	6	6	6	6	6	6
Weight approx. kg		326.0		386.0			950	

[1)] For bayonet type

All other dimensions should be taken from the table about chuck with plain back mounting.

MAIN DIMENSIONS OF ONE-PIECE & TWO- PIECE REVERSIBLE JAWS

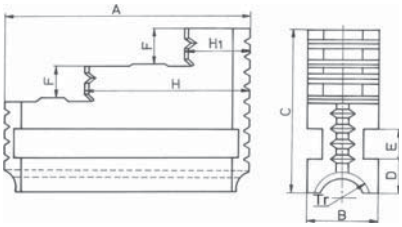

One-piece solid reversible jaws

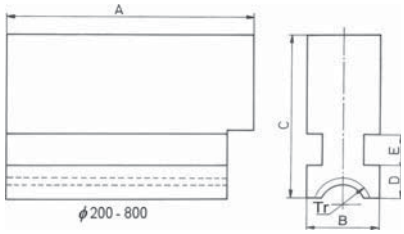

Soft solid jaws

ONE-PIECE SOLID REVERSIBLE JAWS

Chuck size	85	100	125	160	200	250
A	34	34	51	51	81	96.5
B	13	13	16	16	32	32
C	30	30	34.5	34.5	63	63
D	4.5	4.5	6	6	8.7	8.7
E	5	5	5	5	10	10
F	7	7	8	8	14	14
H1	8	8	12.5	12.5	17.5	23
H	17.5	17.5	31.5	31.5	48.5	59
Tr-left hand	Tr 16x2	Tr 16x2	Tr 18x4	Tr 18x4	Tr 28x5	Tr 28x5
Weight approx. kg	0.1	0.1	0.12	0.12	0.72	1.3

Chuck size	315	350	400	500	630	800
A	111	111	129	152.5	177	202
B	40	40	40	52	52	70
C	76.5	76.5	76.5	93.5	93.5	114.5
D	9.7	9.7	9.7	11.7	11.7	15.7
E	12	12	12	15	15	20
F	18	18	18	22	25	25
H1	27	27	32.5	35	45	44
H	67	67	78.5	93	109	122
Tr-left hand	Tr 32x6	Tr 32x6	Tr 32x6	Tr 36x6	Tr 40x6	Tr 44x8
Weight approx. kg	1.5	1.5	1.8	3.4	4.0	7.8

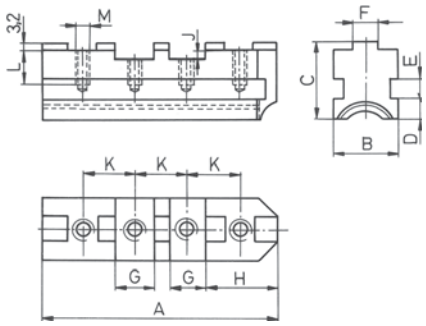

Hard master jaws

HARD MASTER JAWS

Chuck size	200	250	315	400	500	630	800	915	1000	1250
A	79	94	110	129	168	206	206	244	244	244
B	32	32	40	40	52	52	70	70	70	70
C	32	38	39	44	59	59	59	59	59	59
D	8.7	8.7	9.7	9.7	11.7	11.7	15.7	15.7	15.7	15.7
E	10	10	12	12	15	15	20	20	20	20
F-0.03	7.94	12.7	12.7	12.7	12.7	12.7	12.7	12.7	12.7	12.7
G+0.01	12.69	19.04	19.04	19.04	19.04	19.04	19.04	19.04	19.04	19.04
H	33.2	37.5	45.4	54.9	55.5	55.5	55.5	55.5	55.5	55.5
J	4	4	4	7.2	7.2	7.2	7.2	7.2	7.2	7.2
K	22.25	27	31.75	38.1	38.1	38.1	38.1	38.1	38.1	38.1
L	14	20	17.5	22	33.5	33.5	33.5	33.5	33.5	33.5
M	M10	M12	M12	M16	M20	M20	M20	M20	M20	M20
	3/8”-16	1/2”-13	1/2”-13	5/8”-11	3/4”-10	3/4”-10	3/4””-10	3/4”-10	3/4”-10	3/4”-10
Tr-left hand	Tr 28x5	Tr 28x5	Tr 32x6	Tr 32x6	Tr 36x6	Tr 40x6	Tr 44x8	Tr 44x6	Tr 44x6	Tr 44x8
Weight approx. kg	0.6	0.9	1.1	1.2	1.5	2.4	2.4	5.4	5.4	5.4

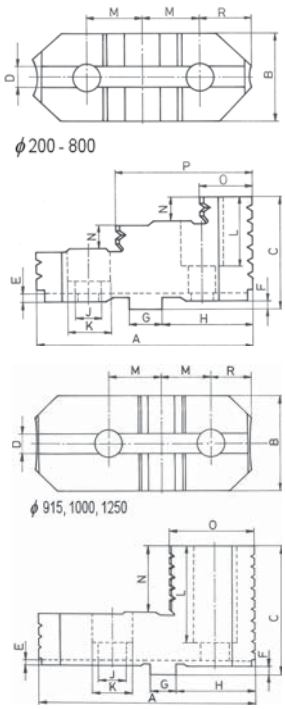

Hard top jaws

HARD TOP JAWS

Chuck size	200	250	315	400	500	630	800	915	1000	1250
A	82	96.5	112.5	129	136	136	136	160	160	160
B	34	34	42	42	54	54	72	72	72	72
C	43.5	51.5	55	64.5	74.5	82	88	97	97	97
D	7.95	12.71	12.71	12.71	12.71	12.71	12.71	12.71	12.71	12.71
E	4	4	4	4	4	4	4	4	4	4
F-0.03	3.2	3.2	3.2	6.3	6.3	6.3	6.3	6.3	6.3	6.3
G + 0.01	12.69	19.04	19.04	19.04	19.04	19.04	19.04	19.04	19.04	19.04
H	35.2	40	47.9	57.4	58	58	58	58	58	58
J	11	14	14	18	22	22	22	22	22	22
K	18	20	20	26	33	33	33	33	33	33
L	21.5	26.5	27.5	32	39.5	43	46	71	71	71
M	22.25	27	31.75	38.1	38.1	38.1	38.1	38.1	38.1	38.1
N	9.5	12	13	13.5	18	21	24	50	50	50
0	22	25	27	26.5	37.5	37.5	40	60	60	60
P	53	62	70.5	79	87	87	89	-	-	-
R	19.3	22.5	25.7	28.8	29.4	29.4	29.4	29.4	29.4	29.4
Weight approx. kg	0.5	0.7	1.3	2.1	3.0	3.0	4.2	4.2	4.2	4.2

MOUNTING BOLTS FOR TOP JAWS

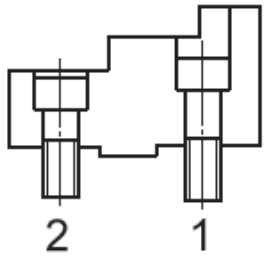

Chuck size	Bolt 1	Bolt 2
200	M10x30	M10x20
250	M12x40	M12x25
315	M12x40	M12x25
400	M16x45	M16x30
500	M20x55	M20x40
630	M20x60	M20x40
800	M20x65	M20x40
915	M20x45	M20x45
1000	M20x45	M20x45
1250	M20x45	M20x45

ENGINEERING DATA FOR 4-JAW INDEPENDENT CHUCKS

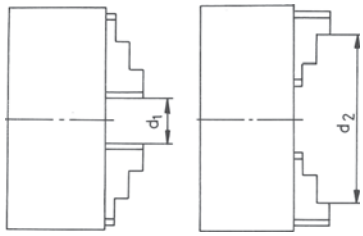

GRIPPING RANGES

Chuck size	85	100	125	160	200	250	315	350
d1 min	3	3	8	8	10	10	15	15
d2 max	85	100	125	160	200	250	315	350
max swing dia.	101	116	150	185	235	296	369	404

Chuck size	400	500	630	800	915	1000	1250
d1 min	20	45	50	50	120	170	170
d2 max	400	500	630	800	915	1000	1250
max swing dia.	465	570	720	888	1003	1088	1338

Gripping ranges are valid for lathe chucks with reversible jaws. Do not exceed maximum chucking ranges.

MAXIMUM PERMISSIBLE ROTATIONAL SPEEDS * (rpm)

Chuck size	85	100	125	160	200	250	315	350
Cast steel or steel body	4000	3800	3500	3200	2500	2000	1500	1500
Cast iron body	-	-	-	-	1800	1500	1200	1200

Chuck size	400	500	630	800	915	1000	1250
Cast steel or steel body	1100	700	550	450	200	200	150
Cast iron body	800	500	400	300	150	150	100

* Valid for symmetrical gripping of the workpiece

SPARE PARTS FOR 4-JAW INDEPENDENT CHUCKS

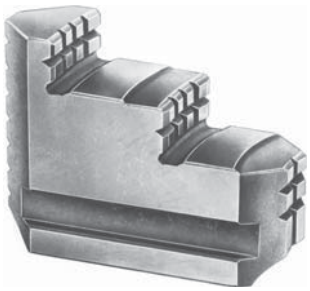

HARD SOLID REVERSIBLE JAWS - SETS

Chuck size mm	Code No 0642
	4-jaw set
85	985 731 002
100	985 740 101
125	985 731 104
160	985 731 104
200	985 731 206
250	985 731 308
315	985 731 400
350	985 731 400
400	985 731 501
500	985 731 603
630	985 731 705
800	985 731 807

HARD MASTER JAWS - SETS

Chuck size mm	Code No 0642
	4-jaw set
200	985 735 200
250	985 735 301
315	985 735 403
400	985 735 505
500	985 735 607
630	985 735 709
800	985 735 800
915	985 735 902
1000	985 735 902
1250	985 735 902

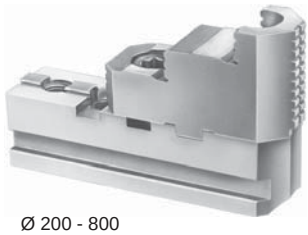

Ø 200 - 800

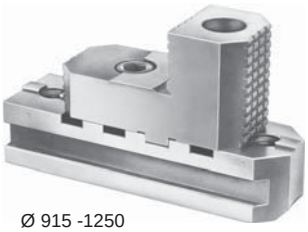

Ø 915 -1250

HARD 2-PIECE REVERSIBLE JAWS - SETS

Chuck size mm	Code No 0642
	4-jaw set
200	985 738 202
250	985 738 304
315	985 738 406
400	985 738 508
500	985 738 600
630	985 738 701
800	985 738 803
915	985 742 908
1000	985 742 908
1250	985 742 908

THRUST BEARING

Chuck size mm	Code No 0642
85	985 733 004
100	985 733 020
125	985 733 106
160	985 733 106
200	985 733 208
250	985 733 300
315	985 733 401
350	985 733 401
400	985 733 503
500	985 733 605
630	985 733 707
800	985 733 809
915	985 733 900
1000	985 733 900
1250	985 733 900

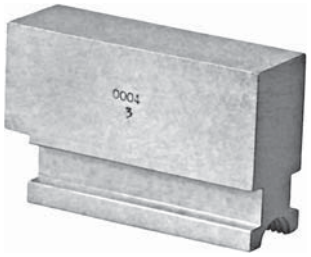

SOFT SOLID JAWS - SETS

Chuck size mm	Code No 0642
	4-jaw set
85	-
100	-
125	-
160	-
200	985 730 205
250	985 730 307
315	985 730 409
350	-
400	985 730 500
500	985 730 602
630	985 730 704
800	985 730 806

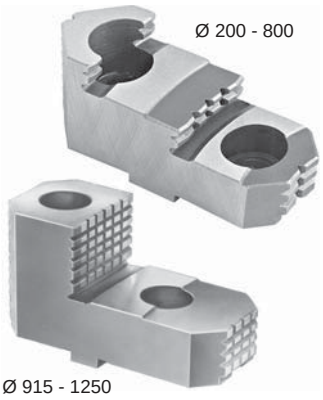

Ø 200 - 800

Ø 915 - 1250

HARD TOP JAWS - SETS

Chuck size mm	Code No 0642
	4-jaw set
200	985 736 200
250	985 736 302
315	985 736 404
400	985 736 506
500	985 736 608
630	985 736 700
800	985 736 801
915	985 744 900
1000	985 744 900
1250	985 744 900

OPERATING SCREW

Chuck size mm	Code No 0642
85	985 732 003
100	985 732 029
125	985 732 105
160	985 732 105
200	985 732 207
250	985 732 309
315	985 732 400
350	985 740 509
400	985 732 502
500	985 732 604
630	985 732 706
800	985 732 808
915	985 740 702
1000	985 740 804
1250	985 740 906

SAFETY WRENCH

Chuck size mm	Code No 0642
85	985 340 102
100	985 340 102
125	985 344 106
160	985 344 106
200	985 344 208
250	985 344 208
315	985 344 300
350	985 344 300
400	985 344 300
500	985 344 401
630	985 344 401
800	985 344 503
915	985 344 503
1000	985 344 503
1250	985 344 503

Example of order : Operating screw 4300-250 lub 0642 985 732 309

SELF-CENTERING CHUCKS WITH LARGE THROUGH HOLE FOR PIPE MACHINING

These lathe chucks cast iron body and steel body are designed for clamping long pipes during machining for conventional and specialized machine-tools. Chucks may work individually or in pairs, mounted on opposite sides of lathe spindle and assuring the same jaw vertical positions in both chucks.

Main advantages of this design are:
- large through holes comparing to outside diameters of chuck body;
- high gripping force;
- possibility of machining very long workpieces;
- high machining accuracy.

3-JAW, CAST IRON BODY TYPE 3295

Standard accessories :
* 1 set of master jaws
* 1 wrench
* 1 set of mounting screws

Optional accessories :
* soft top jaws
* hard top jaws

Jaw weight in dimension tables
Spare parts see page 28

DIN 6350

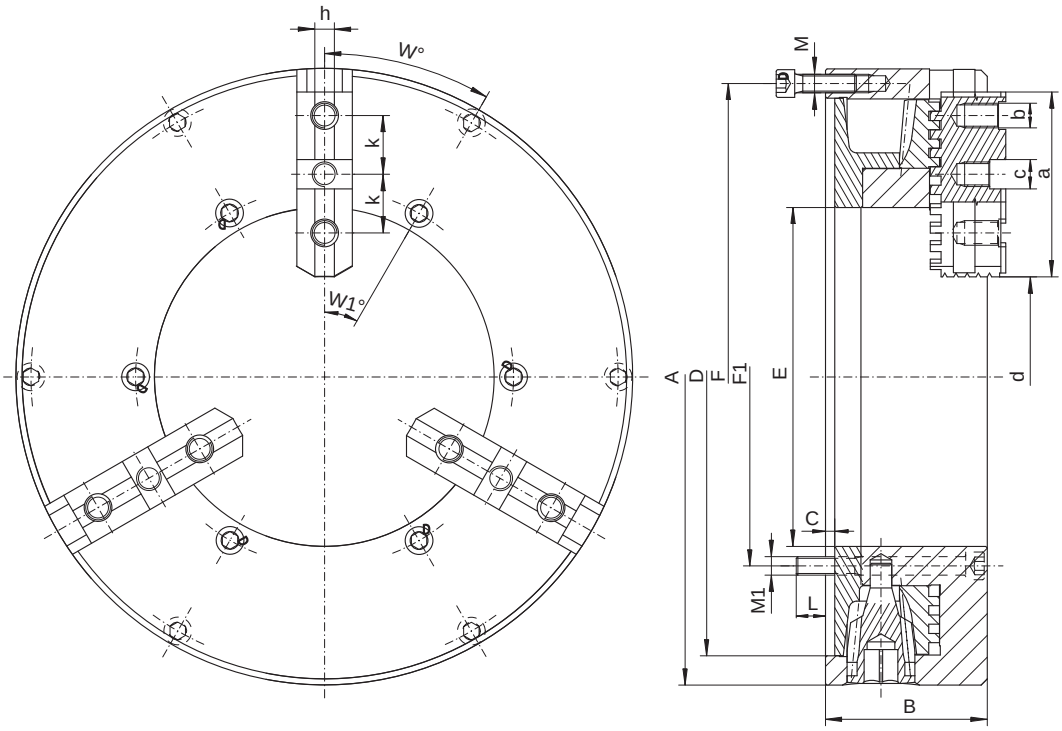

Chuck size		400	500	660	800
Code No 0642		**532 950 405**	**532 950 507**	**532 950 609**	**532 950 700**
A		**400**	**508**	**660**	**800**
B		105	120	135	151
C		6	8	14	7
D		362	462	580	710
E (Through hole)		**220**	**320**	**406**	**410**
F		381	481.5	620	-
F1		-	-	-	460
M		6xM12	6xM16	6xM16	-
M1		-	-	-	6xM24
W		30°	30°	30°	-
W1		-	-	-	30°
L		-	-	-	25
a		120	120	127	225
b		M16	M20	M20	M20
c		19.04	19.04	19.04	19.04
h		12,7	12,7	12,7	12,7
d	min	168	250	376	260
	max	288	380	497	566
Max speed	min $^{-1}$	500	350	250	200
Weight	kg	57,7	75,8	128,9	212,0

Example of order : 3295- 400 or 0642 532 950 405

SELF-CENTERING CHUCKS WITH LARGE THROUGH HOLE FOR PIPE MACHINING

3-JAW, STEEL BODY TYPE 3597

Standard accessories :
* 1 set of master jaws
* 1 wrench
* 1 set of mounting screws

Optional accessories :
* soft top jaws

Jaw weight in dimension tables
Spare parts see page 28

DIN 6350

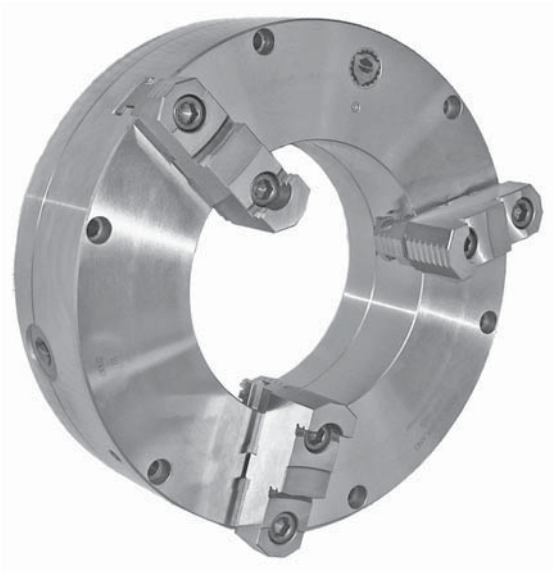

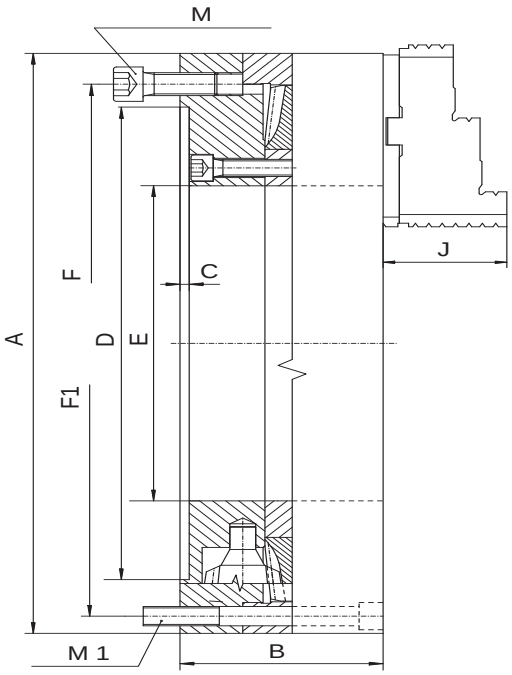

Size		315	405	515	660	800
Code No 0642		**535 970 309**	**535 970 400**	**535 970 502**	**535 970 604**	**535 971 106**
A		315	405	515	660	800
B		97	110	120	140	150
C		5	5	5	7	7
D		260	330	420	545	710
E (**Through hole**)		145	220	320	406	460
F		286	362	458	586	760
F1		286	381	481,5	620	760
J		56,9	67	79	87	-
M		3x M16x30	6x M16x40	6x M16x40	6x M16x40	6x M20x50
M1		3x M16x100	6x M12x120	6x M16x130	6x M16x150	6x M20x160
Gripping range	mm	40 - 140	138-406	264 - 516	349 - 630	260 - 460
Max speed	min $^{-1}$	2500	1000	800	600	700
Weight	kg	47	73	120	230	398

Example of order : 3597- 315 or 0642 535 970 309

SELF-CENTERING CHUCKS WITH LARGE THROUGH HOLE FOR PIPE MACHINING

3 - JAW PRECISION, STEEL BODY TYPE 3515 HD

DIN 55026

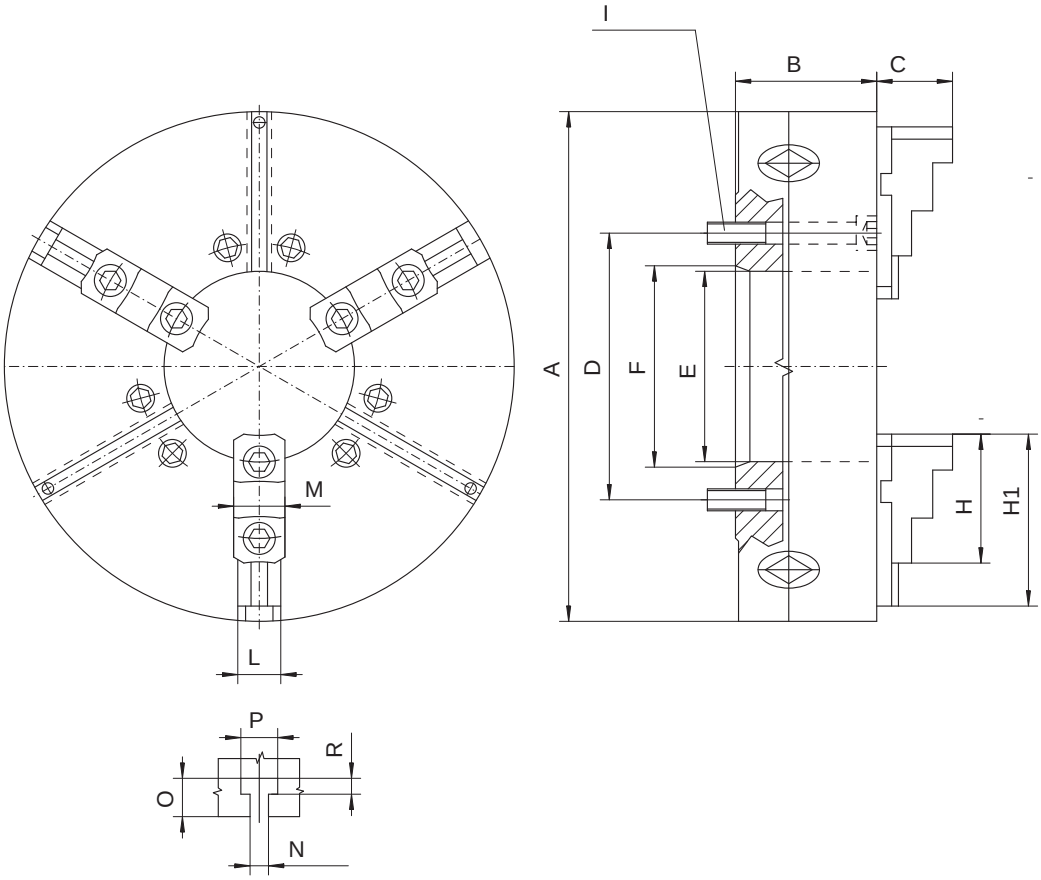

Size		15.1/4"- 6- 4.0" HD	15.1/4"- 8- 5.3" HD	15.3/4"- 11- 5.0" HD	20"- 11- 7.5" HD	25"- 15- 10.75" HD	25"- 20- 12.5" HD	31.1/2"- 15- 10.75" HD	31.1/2"- 20- 12.5" HD
Code No 0642		**535 816 952**	**535 817 057**	**535 817 159**	**535 817 620**	**535 817 686**	**535 817 706**	**535 819 853**	**535 819 881**
Short taper	mm	6	8	11	11	15	20	15	20
A		400	400	400	500	630	630	800	800
B		111	111	111	119	144	144	150	150
C		87	87	87	87	92,5	92,5	92,5	92,5
D		133,4	171,4	165,1	235	330,2	368,3	330,2	463,5
E (**Through hole**)		103	136	130	192	275	320	275	320
F		106,375	139,719	196,869	196,869	285,775	412,775	285,775	412,775
H		135	135	135	135	135	135	135	135
H1		-	-	-	169	210	210	225	225
I		6x1/2"-13x4.1/2"	6x5/8"-11x4.1/2"	6x3/4"-10x4"	6x3/4"-10x5"	6x7/8"-9x6"	6x1"-8x5"	6x7/8"-9x6"	6x1"-8x5"
L		50	50	50	50	70	70	70	70
M		54	54	54	54	75	75	75	75
N		14H10	14H10	14H10	14H10	22H10	22H10	22H10	22H10
O		21	21	21	21	33	33	33	33
P		23	23	23	23	37	37	37	37
R		10	10	10	10	16	16	16	16
Gripping range	mm	25 - 400	25 -400	25 -400	45 - 500	80 - 630	160 - 630	130 - 800	180 - 800
Gripping force	daN	6200	6200	6200	7700	8200	8200	9000	9000
Max speed	min $^{-1}$	1400	1400	1400	1000	850	850	600	600
Weight	kg	102,11	98,32	96,22	156,46	278,2	251,48	502,2	489,00

Example of order : 3515- 15.1/4"- 6- 4.0" HD or 0642 535 816 952

INDEPENDENT CHUCKS WITH LARGE THROUGH HOLE FOR PIPE MACHINING

These lathe chucks are designed for clamping long pipes during machining for conventional and specialized machine-tools. Chucks may work individually or in pairs, mounted on opposite sides of lathe spindle and assuring the same jaw vertical positions in both chucks.

Main advantages of this design are:
- large through holes comparing to outside diameters of chuck body;
- high gripping force;
- possibility of machining very long workpieces.

4 - JAW, STEEL BODY TYPE 4307 HD

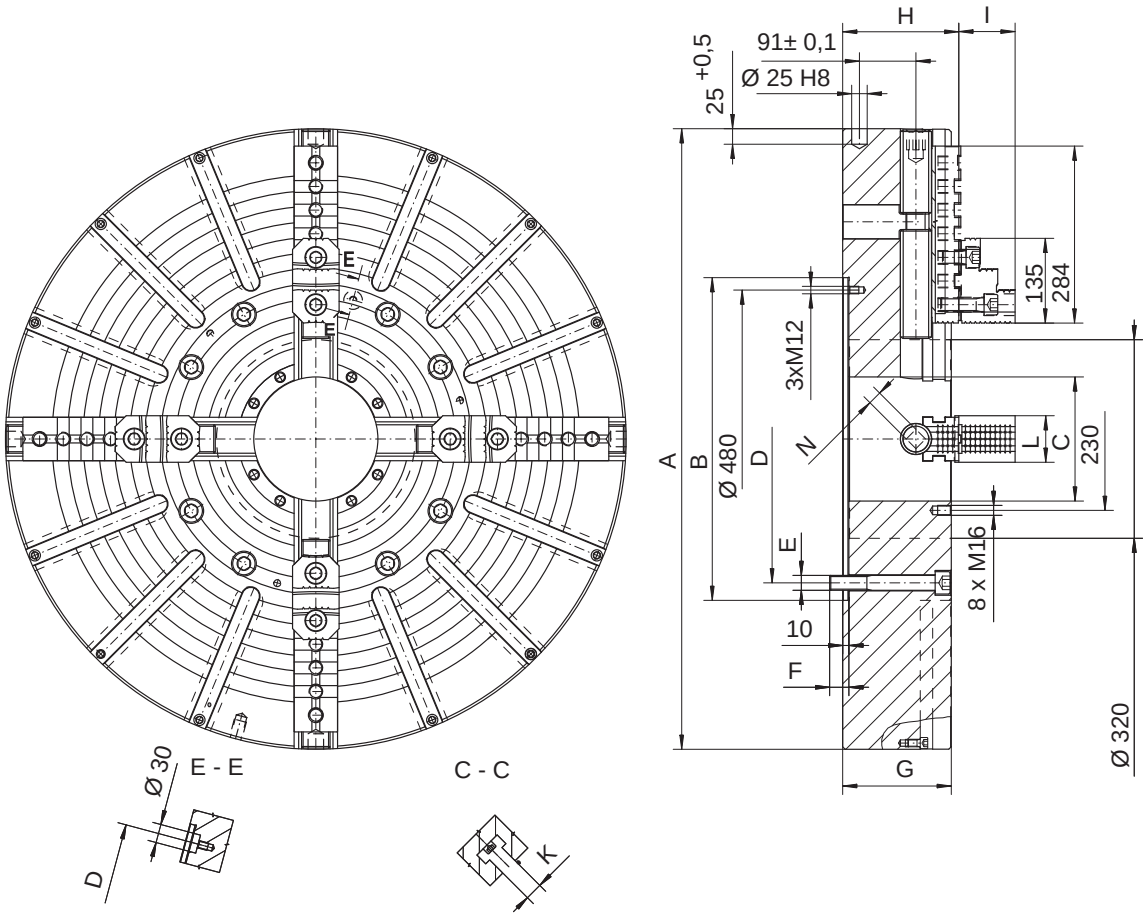

Size		4307-1000/520-200 HD	4307-1250/520-200 HD
Code No 0642		**543 071 409**	**543 071 602**
A		1000	1250
B		520	520
C (**Through hole**)		200	200
D		463,6	463,6
E		8 x M24	8 x M24
F		31	31
G		175	175
H		187,1	187,1
I		90,7	90,7
K		28	28
L		75	75
N		22	22
Gripping range	mm	50 - 1000	50 - 1250
Torque on wrench	Nm	500	500
Gripping force per jaw	daN	5000	5000
Max speed	min $^{-1}$	430	350
Weight	kg	985	1560

Example of order : 4307- 1000/520-200 HD or 0642 543 071 409

INDEPENDENT CHUCKS WITH LARGE THROUGH HOLE FOR PIPE MACHINING

4 - JAW, STEEL BODY TYPE 4317 HD

DIN 55026

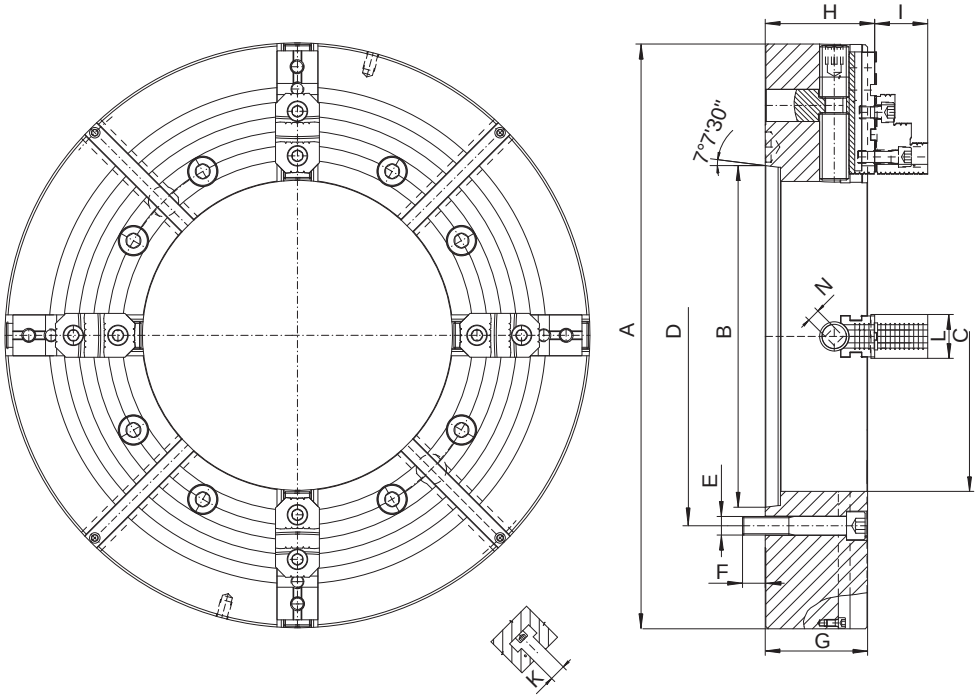

Size		16"- 8- 5.3" HD	16"- 11- 6.5" HD	20"- 11- 6.5" HD	20"- 15- 8" HD	25"- 15- 10.5" HD	25"- 20- 10.5" HD	25"- 20- 12.5" HD
Code No 0642		**543 173 500**	**543 173 553**	**543 174 500**	**543 174 554**	**543 175 555**	**543 175 596**	**543 175 603**
Short taper 1 : 4	mm	8	11	11	15	15	20	20
A		415	415	500	500	630	630	630
B		139,719	196,869	196,869	285,775	285,775	412,775	412,775
C (**Through hole**)		136	168	168	205	270	270	320
D		171,4	235,0	235,0	330,2	330,2	463,6	463,6
E		4 x 5/8-11 UNC	4 x 3/4-10 UNC	8 x 3/4-10UNC	8 x 7/8-9 UNC	8 x 7/8-9 UNC	8 x 1-8 UNC	8 x 1-8 UNC
F		21,3	25,3	25,4	31,4	34,1	38,1	38,1
G		145	145	145	145	155	155	155
H		154,1	154,1	154,1	154,1	167,1	167,1	167,1
I		75,7	75,7	75,7	75,7	90,7	90,7	90,7
K		18	18	22	22	22	22	22
L		62	62	60	60	75	75	75
N		19	19	19	19	22	22	22
Gripping range	mm	45-415	45-415	45-500	45-500	50 - 630	50 - 630	100 - 630
Torque on wrench	Nm	350	350	350	350	400	400	400
Gripping force per jaw	daN	3200	3200	3200	3200	3700	3700	3700
Max speed	min $^{-1}$	1200	1200	1000	1000	850	850	850
Weight	kg	145	137	204	188	310	295	300

Size		28"- 15- 10.5" HD	28"- 20- 12.5" HD	31.1/2"- 15- 10.5" HD	31.1/2"- 20- 12.5" HD	31.1/2"- 20- 14.5" HD	40"- 28- 20.5" HD	49"- 15- 11" HD
Code No 0642		**543 176 556**	**543 176 604**	**543 177 557**	**543 177 659**	**543 177 690**	**543 177 809**	**543 177 900**
Short taper 1 : 4	mm	15	20	15	20	20	28	15
A		710	710	800	800	800	1000	1250
B		285,775	412,775	285,775	412,775	412,775	584,225	285,775
C		270	320	270	320	370	530	281
D		330,2	463,6	330,2	463,6	463,6	647,6	330,2
E		8 x 7/8-9 UNC	8 x 1-8 UNC	8 x 7/8-9 UNC	8 x 1-8 UNC	8 x 1-8 UNC	8 x 1,1/4-7 UNC	8 x 7/8-9 UNC
F		34,1	38,1	34,1	38,1	38,1	38,8	28,8
G		155	155	165	165	165	175	175
H		167,1	167,1	177,1	177,1	177,1	187,1	187,1
I		90,7	90,7	90,7	90,7	90,7	90,7	90,7
K		22	22	22	22	22	28	28
L		75	75	75	75	75	75	75
N		22	22	22	22	22	22	22
Gripping range	mm	75 - 710	100 - 710	75 - 800	115 - 800	155 - 800	350 - 1000	100 - 1250
Torque on wrench	Nm	450	450	450	450	450	500	500
Gripping force per jaw	daN	4100	4100	4100	4100	4100	4500	5000
Max speed	min $^{-1}$	750	750	600	600	600	430	350
Weight	kg	415	395	585	565	545	765	1606

Example of order : 4317-28"- 15- 10.5" HD or 0642 543 176 556

INDEPENDENT CHUCKS WITH LARGE THROUGH HOLE FOR PIPE MACHINING

4 - JAW, STEEL BODY TYPE 4347 HD

DIN 55029

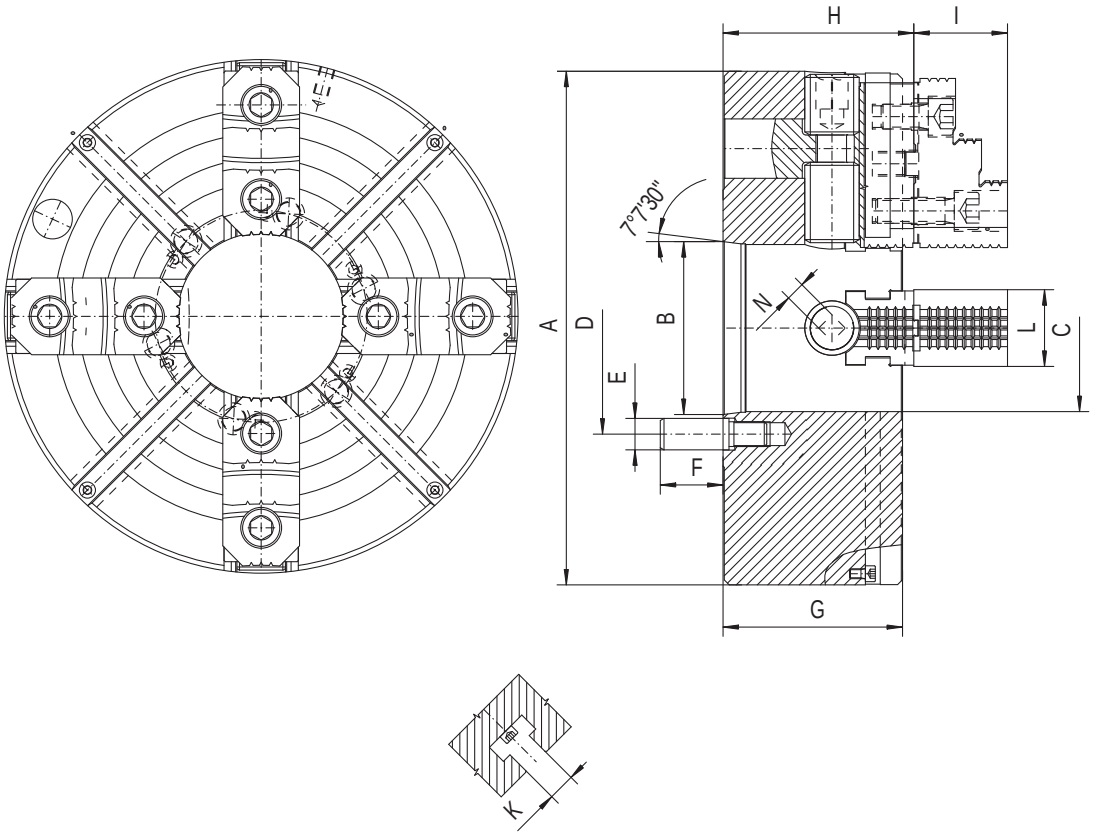

Size		16"- 8- 5.3" HD	16"- 11- 6.5" HD	20"- 8- 5.3" HD	20"- 11- 6.5" HD	28"- 11- 7.5" HD
Code No 0642		**543 473 501**	**543 473 555**	**543 474 502**	**543 474 556**	**543 476 504**
Short taper	mm	8	11	8	11	11
A		415	415	500	500	710
B		139,719	196,869	139,719	196,869	196,869
C (**Through hole**)		136	168	136	168	192
D		171,4	235	171,4	235	235
E		25,4	30,2	25,4	30,2	30,2
F		50,7	60,6	50,7	60,6	60,6
G		145	145	145	145	155
H		154,1	154,1	154,1	154,1	167,1
I		75,7	75,7	75,7	75,7	90,7
K		18	18	22	22	22
L		60	60	60	60	75
N		19	19	19	19	22
Gripping range	mm	45 - 400	45 - 400	45 - 500	45 - 500	75 - 710
Torque on wrench	Nm	350	350	350	350	450
Gripping force per jaw	daN	3200	3200	3200	3200	4100
Max speed	min $^{-1}$	1200	1200	1000	1000	750
Weight	kg	136	128	212	205	450

Example of order : 4347- 28"- 11 - 7.5" HD or 0642 543 473 504

ADAPTERS FOR BISON LATHE CHUCKS

Cast-iron adapters for plain back self-centering chucks.
Allowance for turning on the chuck side. Mounting instructions see in chuk service manual.

	Size mm	Short taper	A mm	Code No 0642	B mm	Code No 0642	B mm	Weight approx. kg
DIN 55026 AND DIN 55027				**Type 8210**		**Type 8230**		
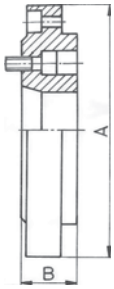 DIN 55026 - Type 8210	100	3	100.5	582 100 301	18.5	582 300 102	16.5	1.6
	125	3	125.5	582 100 403	18.5	582 300 306	18.5	2.4
	125	4	125.5	582 100 505	18.5	582 300 408	18.5	2.4
	160	3	160.5	582 100 607	18.5	582 300 601	21	4.3
	160	4	160.5	582 100 709	21	582 300 703	21	4.3
	160	5	160.5	582 100 800	21	582 300 805	21	4.3
	200	3	201	582 100 902	21	582 300 861	21	7.0
	200	4	201	582 101 007	21	582 300 907	21	7.0
	200	5	201	582 101 109	21	582 301 103	21	7.0
	200	6	201	582 101 200	21	582 301 205	21	7.0
	250	5	251	582 101 506	21	582 301 500	21	11.0
	250	6	251	582 101 608	26	582 301 602	21	11.0
	250	8	251	582 101 700	26	582 301 704	26	18.0
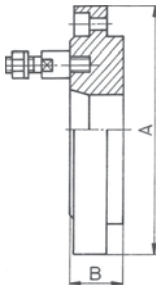 DIN 55027 - Type 8230	315	6	316	582 102 008	33	582 302 002	33	18.0
	315	8	316	582 102 100	33	582 302 104	33	18.0
	315	11	316	582 102 214	33	582 302 206	33	18.0
	400	6	402	582 102 405	33	582 302 400	33	36.0
	400	8	402	582 102 507	33	582 302 501	33	36.0
	400	11	402	582 102 611	33	582 302 603	33	36.0
	500	8	502	582 103 009	34	582 303 003	34	60.0
	500	11	502	582 103 113	34	582 303 105	34	60.0
	500	15	502	582 103 215	34	582 303 207	34	60.0
	630	8	633	582 103 406	42	582 303 400	42	105.0
	630	11	633	582 103 510	42	582 303 502	42	105.0
	630	15	633	582 103 612	42	582 303 604	42	105.0

	Size mm	Short taper	A mm	Code No 0642	B mm	Weight approx. kg
DIN 55029			**Type 8240**			
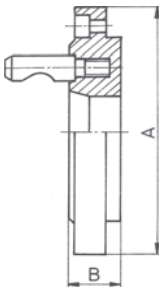	100	3	100.5	582 450 113	26	1.6
	125	3	125.5	582 450 215	26	2.4
	125	4	125.5	582 451 216	26	2.4
	160	3	160.5	582 450 317	27	4.3
	160	4	160.5	582 451 318	27	4.3
	160	5	160.5	582 452 319	30	4.3
	160	6	160.5	582 453 310	36.5	4.3
	200	3	201	582 450 419	27	7.0
	200	4	201	582 451 410	27	7.0
	200	5	201	582 452 410	30	7.0
	200	6	201	582 453 411	36.5	7.0
	200	8	201	582 454 412	40	7.0
	250	4	251	582 451 511	28	11.0
	250	5	251	582 452 512	30	11.0
	250	6	251	582 453 513	36.5	18.0
	250	8	251	582 454 514	39	18.0
	315	6	316	582 453 615	39.5	18.0
	315	8	316	582 454 616	42	18.0
	315	11	316	582 455 617	47	18.0
	400	6	402	582 453 717	36.5	36.0
	400	8	402	582 454 718	39	36.0
	400	11	402	582 455 719	47	36.0
	500	8	502	582 454 810	39	60.0
	500	11	502	582 455 810	47	60.0
	500	15	502	582 456 312	50	60.0
	630	8	633	582 455 912	39	105.0
	630	11	633	582 456 017	47	105.0
	630	15	633	582 456 414	50	105.0

ADAPTERS FOR BISON LATHE CHUCKS

Cast-iron adapters for plain back self-centering and independent chuck, rough on the chuck side.
Mounting instructions see in chuk service manual.

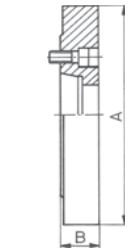

DIN 55026
Type 8212

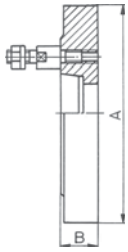

DIN 55027
Type 8232

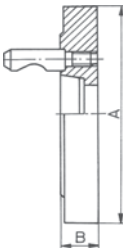

DIN 55029
Type 8242

	Size mm	Short taper	A mm	Code No 0642	B mm	Code No 0642	B mm	Code No 0642	B mm	Weight approx. kg
DIN 55026 I DIN 55027				**Type 8212**		**Type 8232**		**Type 8242**		
	100	3	102	582 120 308	18	582 320 109	18	582 420 106	28	1,8
	125	3	127	582 120 400	19,5	582 320 302	19.5	582 420 300	50	2,4
	125	4	127	582 120 501	19,5	582 320 404	19.5	582 420 401	30	2,4
	160	3	162	-	-	-	-	582 420 503	50	4,2
	160	4	162	582 120 705	24	582 320 700	24	582 420 605	55	4,2
	160	5	162	582 120 807	24	582 320 801	24	582 420 707	35	4,2
	200	4	203	-	-	-	-	582 421 209	44	12,0
	200	5	203	582 121 105	38	582 321 100	38	582 421 300	50	12,0
	200	6	203	582 121 207	33	582 321 201	33	582 421 402	35	12,0
	250	5	253	582 121 502	33	582 321 507	33	582 421 708	49	16,0
	250	6	253	582 121 604	50	582 321 609	50	582 421 800	49	16,0
	250	8	253	582 121 706	46	582 321 700	46	582 421 901	49	16,0
	315	6	318	582 122 004	33	582 322 009	33	582 422 200	70	22,0
	315	8	318	582 122 106	55	582 322 100	55	582 422 301	55	22,0
	315	11	318	582 122 210	55	582 322 202	47	582 422 403	55	22,0
	400	8	405	582 122 503	43	582 322 508	43	582 422 800	70	42,0
	400	11	405	582 122 605	75	582 322 600	47	582 422 902	50	42,0
	500	8	505	582 123 005	45	582 323 000	45	582 423 302	46	72,0
	500	11	505	582 123 110	45	582 323 101	45	582 423 404	72	72,0
	630	11	635	582 123 517	45	582 323 509	45	582 423 700	72	105,0
	630	15	635	582 123 619	56	582 323 600	56	582 423 801	60	105,0
	800[1)]	11	385	582 123 812	45	582 323 804	45	582 424 100	50	130,0
	800[1)]	15	408	582 123 914	45	582 323 906	45	582 424 201	55	130,0

[1)] for independent chucks type 4300

Steel adapters, fully machined, for self-centering with fine adjustment chuks type 3564, 3565 and 3864, 3865.

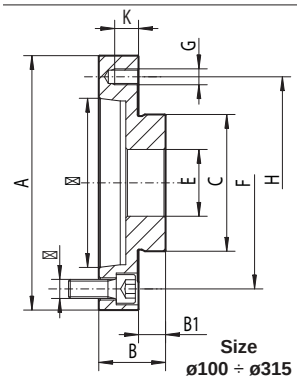

Size
ø100 ÷ ø315

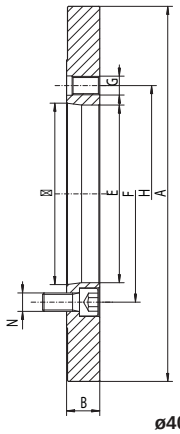

Size
ø400 ÷ ø630

FORM A MOUNTING													
Size mm	A mm	Short taper	Code No 0642	B	B1	C	D	E	F	G	H	K	Weight approx. kg
Type 8215 DIN 55026													
100	100 105	3	582 150 506	40	12	45	53.975	20	70.6	M8	83	14	1.6
		4	582 150 519	40	12	45	63.513	20	82.6	M8	83	14	1.5
125	125	4	582 150 649	36	14	55	63.513	35	82.6	M8	108	22	2.2
		5	582 150 700	36	14	55	82.563	35	104.8	M8	108	22	1.9
160	160	3	582 150 738	45	16	86	53.975	42	70.6	M10	140	20	4.4
		4	582 150 740	45	16	86	63.513	42	82.6	M10	140	29	4.4
		5	582 150 801	37	16	86	82.563	42	104.8	M10	140	21	3.1
		6	582 150 903	42	16	86	106.375	42	133.4	M10	140	26	3.3
200	200	4	582 151 049	33	17	110	63.513	55	82.6	M10	176	16	4.4
		5	582 151 100	33	17	110	82.563	55	104.8	M10	176	16	4.2
		6	582 151 201	45	17	110	106.375	55	133.4	M10	176	28	6.2
250	250	5	582 151 507	38	19	145	82.563	76	104.8	M12	224	19	7.8
		6	582 151 609	38	19	145	106.375	76	133.4	M12	224	19	7.9
		8	582 151 700	46	19	145	139.719	76	171.4	M12	224	26	9.2
315	315	6	582 152 009	38	19	180	106.375	103	133.4	M16	286	19	12.3
		8	582 152 100	46	19	180	139.719	103	171.4	M16	286	27	16.0
		11	582 152 215	55	19	180	196.869	103	235	M16	286	36	18.7
400	298.45	6	582 152 304	35	-	298.45	106.375	136	133.4	M16	171.4	35	14.3
		8	582 152 406	37	-	298.45	139.719	136	171.4	M16	171.4	29	12.8
		11	582 152 510	48	-	298.45	196.869	136	235	M16	171.4	27	16.2
500	407	8	582 152 701	36	-	407	139.719	136	171.4	M20	235	36	31.5
		11	582 152 803	36	-	407	196.869	192.8	235	M20	235	36	27.6
		15	582 152 905	52	-	407	285.775	190	330.2	M20	235	52	34.6
630	407	8	582 152 509	36	-	407	139.719	136	171.4	M20	330.2	36	31.5
		11	582 153 600	36	-	407	196.869	192.8	235	M20	330.2	36	27.6
		15	582 153 702	52	-	407	285.775	252	330.2	M20	330.2	52	29.6

ADAPTERS FOR BISON LATHE CHUCKS

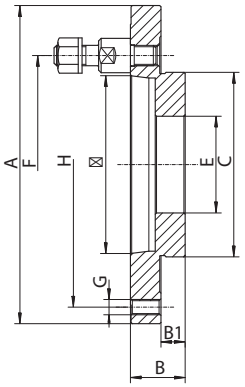

Size
ø100 ÷ ø315

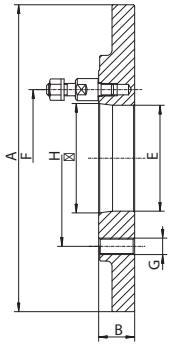

Size
ø400 ÷ ø630

BAYONET MOUTING

Size mm	A mm	Short taper	Code No 0642	B	B1	C	D	E	F	G	H	Weight approx. kg
Type 8235 DIN 55027												
100	100	3	582 350 103	31	12	45	53.975	20	75	M8	83	1.3
	105	4	582 350 116	31	12	45	63.513	20	85	M8	83	1.2
125	125	3	582 350 205	33	14	55	53.975	35	75	M8	108	1.8
	125	4	582 350 218	33	14	55	63.513	35	85	M8	108	1.7
	130	5	582 350 220	35	14	55	82.563	35	104.8	M8	108	1.8
160	160	3	582 350 307	32	16	86	53.975	42	75	M10	140	2.8
		4	582 350 409	32	16	86	63.513	42	85	M10	140	2.8
		5	582 350 500	37	16	86	82.563	42	104.8	M10	140	3.0
200	200	4	582 350 704	33	17	110	63.513	55	85	M10	176	4.0
		5	582 350 806	33	17	110	82.563	55	104.8	M10	176	4.4
		6	582 350 908	40	17	110	106.375	55	133.4	M10	176	5.3
250	250	5	582 351 002	38	19	145	82.563	76	104.8	M12	224	8.4
		6	582 351 104	38	19	145	106.375	76	133.4	M12	224	7.9
		8	582 351 206	43	19	145	139.719	76	171.4	M12	224	10.3
315	315	6	582 351 308	43	19	180	106.375	103	133.4	M16	286	12.9
		8	582 351 400	43	19	180	139.719	103	171.4	M16	286	15.0
		11	582 351 501	50	19	180	196.869	103	235	M16	286	17.9
400	298.45	6	582 352 309	35	-	298.45	106.375	103	133.4	M16	171.4	12.8
		8	582 352 400	37	-	298.45	139.719	135.8	171.4	M16	171.4	15.0
		11	582 352 502	37	-	298.45	196.869	120	235	M16	171.4	17.0
500	407	8	582 352 706	36	-	407	139.719	136	171.4	M20	235	31.5
		11	582 352 808	36	-	407	196.869	192.8	235	M20	235	29.6
		15	582 352 900	52	-	407	285.775	190	235	M20	235	39
630	407	8	582 353 503	36	-	407	139.719	136	171.4	M20	330.2	31.5
		11	582 353 605	36	-	407	196.869	192.8	330.2	M20	330.2	29.6
		15	582 353 707	52	-	407	285.775	252	330.2	M20	330.2	34

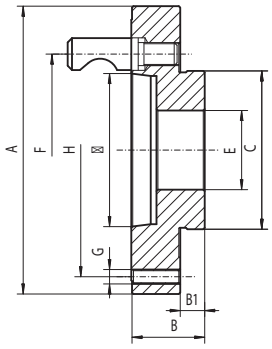

Size
ø100 ÷ ø315

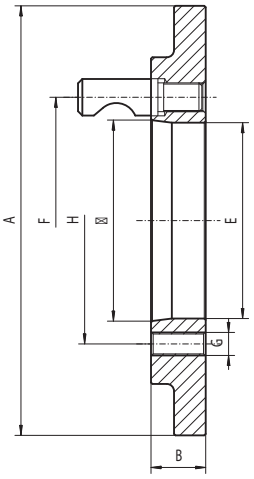

Size
ø400 ÷ ø630

CAMLOCK MOUTING

Size mm	A mm	Short taper	Code No 0642	B	B1	C	D	E	F	G	H	Weight approx. kg
Type 8245 DIN 55029												
100	100	3	582 458 006	38	12	45	53.975	20	70.6	M8	83	1.5
	108	4	582 458 019	40	12	45	63.513	20	82.6	M8	83	1.8
125	125	3	582 458 108	40	14	55	53.975	35	70.6	M8	108	2.7
		4	582 458 200	39	14	55	63.513	35	82.6	M8	108	2.6
	135	5	582 458 225	44	14	55	82.563	35	104.8	M8	108	3.1
160	160	3	582 458 301	46	16	86	53.975	42	70.6	M10	140	4.9
		4	582 458 403	46	16	86	63.513	42	82.6	M10	140	4.5
		5	582 458 505	46	16	86	82.563	42	104.8	M10	140	4.5
	170	6	582 458 518	51	16	86	106.375	42	133.4	M10	140	5.9
200	200	3	582 458 607	33	17	110	53.975	51.4	70.6	M10	176	4.7
		4	582 458 709	33	17	110	63.513	55	82.6	M10	176	4.7
		5	582 458 800	47	17	110	82.563	55	104.8	M10	176	7.2
		6	582 458 902	51	17	110	106.375	55	133.4	M10	176	8.0
250	250	4	582 458 943	38	19	145	63.513	60.5	82.6	M12	224	8.6
		5	582 459 007	38	19	145	82.563	76	104.8	M12	224	8.0
		6	582 459 109	53	19	145	106.375	76	133.4	M12	224	12.9
		8	582 459 200	60	19	145	139.719	76	171.4	M12	224	14.7
315	315	6	582 459 302	38	19	180	106.375	103	133.4	M16	286	12.9
		8	582 459 404	57	19	180	139.719	103	171.4	M16	286	21.7
		11	582 459 506	64	19	180	196.869	103	235	M16	286	24.0
400	298.45	6	582 459 636	35	-	183	106.375	103	133.4	M16	171.4	11.7
		8	582 459 712	38	-	227	139.719	136.1	171.4	M16	171.4	11.9
		11	582 459 814	48	-	297	196.869	136	235	M16	171.4	17.5
500	407	8	582 459 931	36	-	407	139.719	136	171.4	M20	235	33.5
		11	582 459 944	36	-	407	196.869	192.8	235	M20	235	35.3
		15	582 459 957	52	-	407	285.775	190	330.2	M20	235	37.8
630	407	8	582 459 972	36	-	407	139.719	136	171.4	M20	330.2	33.5
		11	582 459 985	36	-	407	196.869	192.8	235	M20	330.2	35.3
		15	582 459 998	52	-	407	285.775	252	330.2	M20	330.2	32.8

ADAPTERS FULLY MACHINED FOR BISON LATHE CHUCKS

TYPE 8210-X

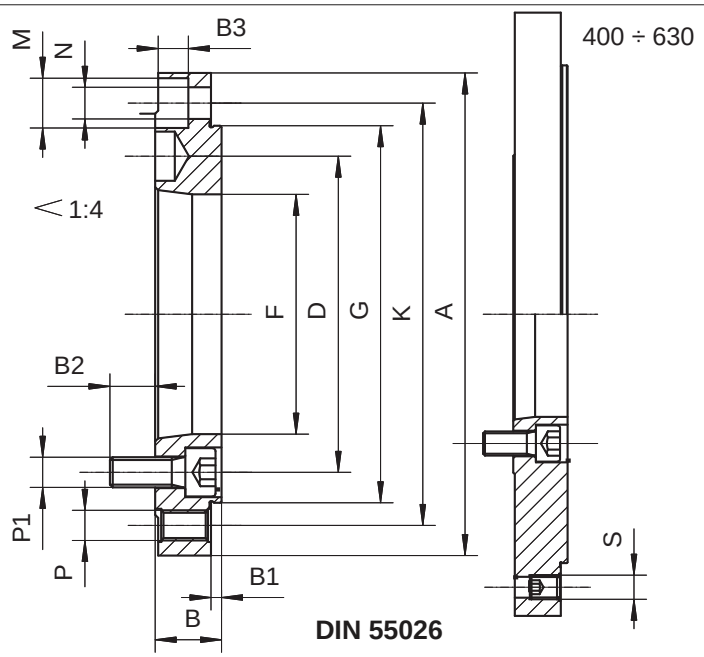

Fully machined cast-iron adapters for plain back self-centering chucks.
Allowance for turning on the chuck side. Mounting instructions see in chuk service manual.

FORM A MOUNTING																	
Size	Short taper	Code No 0642	A mm	B	B1	B2	B3	D	F	G(h4)	K	M	N	P	P1	S	Weight approx. kg
Type 8210-X																	
100	3	582 105 306	100	22	2,5	14	-	70,6	51,4	70	83	-	-	3xM8	3xM10	-	0,766
125	3	582 105 408	125	22	3,5	14	10	70,6	51,4	95	108	3x13,5	3x8,4	3xM8	3xM10	-	1,362
	4	582 105 500				13	-	82,6	60,9			-	-				1,249
160	3	582 105 601	160	22	3,5	14	10	70,6	51,4	125	140	6x16,5	6x10,5	3xM10	3xM10	-	2,392
	4	582 105 703				15		82,6	60,9						6xM10		2,24
	5	582 105 805						104,8	79,5								1,94
	6	582 105 907				19,5	-	133,4	103			-	-		3xM12		1,567
180	3	582 106 001	180	22	3,5	12	10	70,6	51,4	145	160	3x16,5	3x10,5	3xM10	3xM10	-	3,235
	4	582 106 103				15		82,6	60,9						6xM10		3,09
	5	582 106 205						104,8	79,5								2,784
	6	582 106 307		25		21	-	133,4	103			-	-		6xM12		2,69
200	4	582 106 409	200	22	3,5	15	10	82,6	60,9	160	176	6x16,5	6x10,5	3xM10	6xM10	-	3,884
	5	582 106 500						104,8	79,5								3,57
	6	582 106 602				21		133,4	103						6xM12		3,09
230	3	582 106 704	230	28	4,5	13	12	70,6	51,4	191	208	3x19	3x13	3xM12	3xM10	-	7,092
	4	582 106 806				12		82,6	60,9						6xM10		6,904
	5	582 106 908				17		104,8	79,5								6,617
	6	582 107 002				19		133,4	103						6xM12		5,94
250	5	582 107 104	250	28	4,5	12	12	104,8	79,5	200	224	6x19	6x13	3xM12	6xM10	-	7,724
	6	582 107 206				19		133,4	103						6xM12		7,07
	8	582 107308				24		171,4	138,1						6xM16		5,93
270	5	582 107 400	270	28	4,5	17	12	104,8	79,5	228	246	3x19	3x13	3xM12	6xM10	-	9,597
	6	582 107 501				19		133,4	103						6xM12		8,92
	8	582 107 603				24		171,4	136,1						6xM16		7,784
315	6	582 107 705	315	33	4,5	19	16	133,4	103	260	286	6x25	6x17	3xM16	6xM12	-	14,637
	8	582 107 807				22		171,4	136,1						6xM16		13,19
	11	582 107 909		38		32	-	235	192,8			-	-		6xM18		11,832
400	6	582 108 003	400	36	4,5	21	16	133,4	103	330	362	6x25	6x17	6xM16	6xM12	3xM16	27,665
	8	582 108 105				20		171,4	136,1						6xM16		26,03
	11	582 108 207				30	17	235	192,8						6xM18		22,33
450	8	582 108 263	450	40	4,5	20	17	171,4	136,1	386	415	6x25	6x17	3xM16	6xM16	3xM16	38,54
500	8	582 108 309	500	36	4,5	20	16	171,4	136,1	420	458	6x25	6x17	6xM16	6xM16	3xM16	43,38
	11	582 108 400				30		235	192,8						6xM18		39,66
	15	582 108 502				32		330,2	281,4						6xM22		31,65
630	8	582 108 604	630	42	6	22	19	171,4	136,1	545	586	6x25	6x17	6xM16	6xM16	3xM16	83,978
	11	582 108 706				24		235	192,8						6xM18		79,47
	15	582 108 808				36		330,2	281,4						6xM22		79,08

Example of order : Adapter 8210-X or 0642 582 105 306

ADAPTERS FULLY MACHINED FOR BISON LATHE CHUCKS

TYPE 8230-X

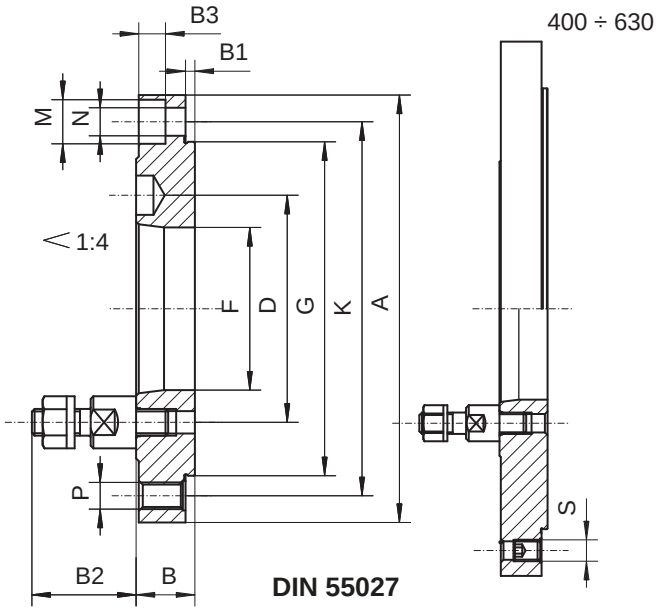

Fully machined cast-iron adapters for plain back self-centering chucks.
Allowance for turning on the chuck side. Mounting instructions see in chuk service manual.

BAYONET MOUNTING

Size	Short taper	Code No 0642	A mm	B	B1	B2	D	F	G(h4)	K	M	N	P	S	Weight approx. kg
Type 8230-X															
100	3	582 300 115	100	22	2,5	34	70,6	51,4	70	83	3x13,5	3x8,4	6xM8	-	0,91
125	3	582 300 319	125	22	3,5	34	70,6	51,4	95	108	3x13,5	3x8,4	6xM8	-	1,56
	4	582 300 410				39	82,6	60,9							1,424
160	3	582 300 614	160	22	3,5	34	70,6	51,4	125	140	6x16,5	6x10,5	6xM10	-	2,58
	4	582 300 716				39	82,6	60,9							2,464
	5	582 300 820				43	104,8	79,5							2,23
	6	582 300 833				50	133,4	103							1,88
180	3	582 300 846	180	22	3,5	34	70,6	51,4	154	160	3x16,5	3x10,5	6xM10	-	3,43
	4	582 300 859				39	82,6	60,9							3,304
	5	582 300 874				43	104,8	79,5							3,08
	6	582 300 887				50	133,4	103							2,74
200	3	582 300 861	200	22	3,5	34	70,6	51,4	160	176	6x16,5	6x10,5	6xM10	-	4,21
	4	582 300 910				39	82,6	60,9							4,094
	5	582 301 116				43	104,8	79,5							3,86
	6	582 301 218				50	133,4	103							3,55
230	4	582 301 259	230	28	4,5	39	82,6	60,9	191	208	3x19	3x13	6xM12	-	7,234
	5	582 301 274				43	104,8	79,5							6,92
	6	582 301 290				50	133,4	103							6,44
250	5	582 301 513	250	28	4,5	43	104,8	79,5	200	224	6x19	6x13	6xM12	-	8,05
	6	582 301 615				50	133,4	103							7,57
	8	582 301 717				60	171,4	136,1							6,71
270	5	582 301 732	270	28	4,5	43	104,8	79,5	228	246	3x19	3x13	6xM12	-	9,9
	6	582 301 758				50	133,4	103							8,62
	8	582 301 773				60	171,4	136,1							8,56
315	6	582 303 015	315	33	4,5	50	133,4	103	260	286	6x25	6x17	6xM16	-	15,13
	8	582 302 117				60	171,4	136,1							14,02
	11	582 302 219				75	235	192,8							12,18
400	6	582 302 412	400	36	4,5	50	133,4	103	330	362	6x25	6x17	6xM16	3xM16	28,163
	8	582 302 514				60	171,4	136,1							26,893
	11	582 302 616				75	235	192,8							24,703
450	8	582 302 657	450	40	4,5	60	171,4	136,1	386	415	6x25	6x17	6xM16	3xM16	39,373
	11	582 302 685				75	235	192,8							36,733
500	8	582 303 016	500	36	4,5	60	171,4	136,1	420	458	6x25	6x17	6xM16	3xM16	44,253
	11	582 303 118				75	235	192,8							42,063
	15	582 303 210				90	330,2	281,4							35,661
630	8	582 303 413	630	42	6	60	171,4	136,1	545	586	6x25	6x17	6xM16	3xM16	84,763
	11	582 303 515				75	235	192,8							81,893
	15	582 303 617				90	330,2	281,4							74,021

Example of order : Adapter 8230-X lub 0642 582 300 115

ADAPTERS FULLY MACHINED FOR BISON LATHE CHUCKS

TYPE 8240-X

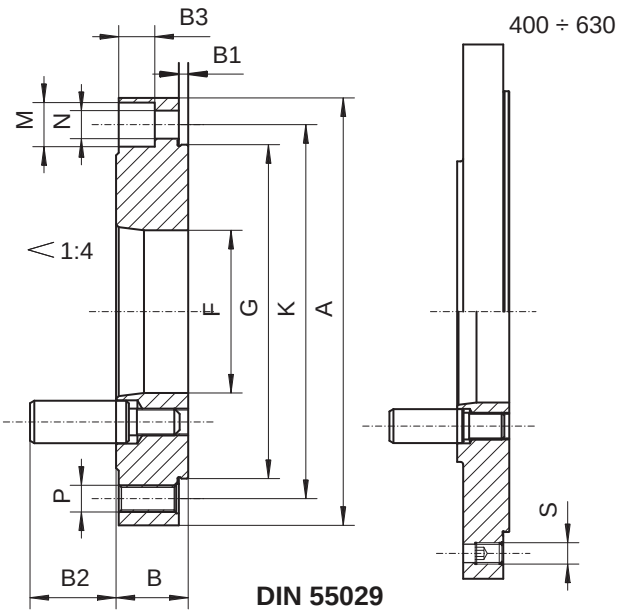

Fully machined cast-iron adapters for plain back self-centering chucks.
Allowance for turning on the chuck side. Mounting instructions see in chuk service manual.

CAMLOCK MOUNTING														
Size	Short taper	Code No 0642	A mm	B	B1	B2	F	G(h4)	K	M	N	P	S	Weight approx. kg
Type 8240-X														
125	4	582 451 229	125	26	3,5	32,2	60	95	108	3x13,5	3x8,4	6xM8	-	1,56
160	3	582 450 320	160	27	3,5	30,8	51,4	125	140	6x16,5	6x10,5	6xM10	-	3,07
	4	582 451 320				32,2	60							2,911
	5	582 452 321		30		38,2	79,5							2,962
180	5	582 452 350	180	30	3,5	38,2	79,5	145	160	3x16,5	3x10,5	6xM10	-	4,159
200	3	582 450 421	200	27	3,5	30,8	51,4	160	176	6x16,5	6x10,5	6xM10	-	5,077
	4	582 451 422				32,8	60							4,944
	5	582 452 423		30		38,2	79,5							4,745
	6	582 453 424		36,5		44,2	103							5,94
230	5	582 452 421	230	30	4,5	38,2	79,5	191	208	3x19	3x13	6xM12	-	6,876
	6	582 453 452		36,5		44,2	103							7,502
250	5	582 452 525	250	30	4,5	38,2	79,5	200	224	6x19	6x13	6xM12	-	8,605
	6	582 453 526		36,5		44,2	103							8,724
	8	582 454 527		39		50,7	136,1							9,393
270	6	582 453 554	270	36,5	4,5	44,2	103	228	246	3x19	3x13	6xM12	-	10,436
	8	582 454 555		39		50,7	136,1							10,528
315	6	582 453 628	315	39	4,5	44,2	103	260	286	6x25	6x17	6xM16	-	17,376
	8	582 454 629				50,7	136,1							15,936
	11	582 455 620		47		60,6	192,8							16,304
400	8	582 454 720	400	39	4,5	50,7	136,1	330	362	6x25	6x17	6xM16	3xM16	27,353
	11	582 455 721		47		60,6	192,8							27,431
450	8	582 454 761	450	40	4,5	50,7	136,1	386	415	6x25	6x17	6xM16	3xM16	39,627
	11	582 454 721		47		60,6	192,8							42,84
500	8	582 454 822	500	39	4,5	50,7	136,1	420	458	6x25	6x17	6xM16	3xM16	45,405
	11	582 455 823		47		60,6	192,8							44,531
630	11	582 453 020	630	47	6	60,6	192,8	545	586	6x25	6x17	6xM16	3xM16	74,48
	15	582 456 427		50		69,6	281,4							70,339

Example of order : Adapter 8240-X or 0642 582 451 229

3-JAW CHUCKS WITH MORSE TAPER

Designed for turning, milling and grinding operations for simultaneously supporting and clamping long objects (tubes, shaft etc.).
May work in horizontal and vertical position.

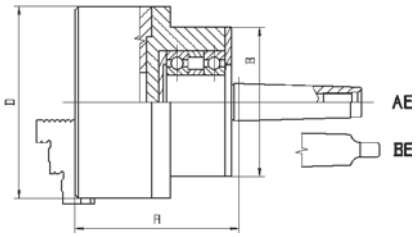

ROTATING - Type 9154, 9155								
D	SM	A	B	min $^{-1}$	Weight approx. kg	Code Nr 0642	Code No 0642	Code No 0642
						Type 9154-AE	Type 9154- BE	Type 9155- BE
80	2	102.5	-	4000	3.5	591 542 009	591 540 007	-
80	3	102.5	-	3500	3.8	591 542 100	591 540 109	-
100	3	111.5	-		5.5	-	591 540 506	-
100	4	113,0	-		5.9	-	591 540 608	-
125	4	127,0	-	3200	7.9	591 541 700	591 541 008	-
125	5	127,0	-		8.6	591 541 507	591 541 100	-
160	5	149.5	110	3000	14.3	591 541 405	591 541 609	591 551 403

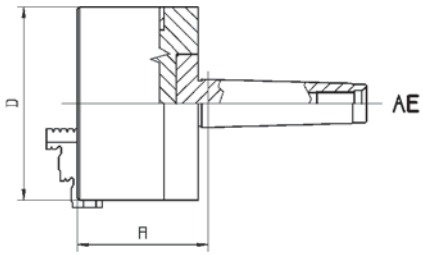

DEAD - Type 9156					
D	SM	A	min $^{-1}$	Weight approx. kg	Code Nr 0642
Type 9156					
80	2	65.5	4000	2.2	591 560 003
80	3	62.5		2.3	591 560 105
100	3	68.5	3500	3.7	591 560 502
125	4	85,0	3200	6.7	591 561 004
125	5	105,0		7,0	591 561 106
160	4	93.5	3000	14.9	591 561 300
160	5	93.5		15.2	591 561 401

Standard accessories :
Type 9154, 9156 - chuck 3274, hard solid outside and inside solid jaws, wrench.
Type 9155 - chuck 3275, hard 2-piece reversible jaws, wrench.

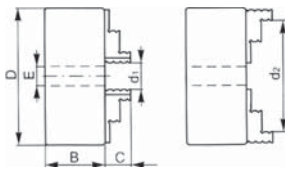

D	B	E	C		d_1 min	d_2 max
			Solid jaws	2-piece reversible jaws		
80	44	16	13	-	2	71
100	50	20	17	-	3	83
125	56	32	20	40	3	125
160	64.5	42	32	43	3	160

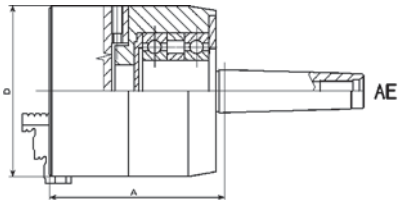

ROTATING WITH FINE ADJUSTMENT- type 9164, 9165						
D	SM	A	min $^{-1}$	Weight approx. kg	Code No 0642	Cod No 0642
					Type 9164	Type 9165
100	3	151	2500	6.8	591 640 503	-
100	4	154.5	2500	7.1	591 640 605	-
125	4	155.5	2000	9.2	591 641 005	591 652 208
125	5	160.5	2000	10.3	591 641 107	591 652 300
160	5	156.5	1800	32.4	591 641 402	591 652 605

Example of order: 9164-100/3 AE or 0642 591 640 529

Standard accessories :
Type **9164** - chuck **3564**, hard solid outside jaws, wrench, hex key.
Type **9165** - chuck **3565**, hard 2-piece reversible jaws, wrench, hex key.

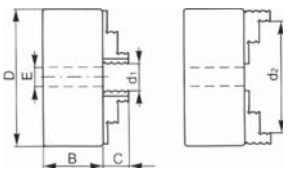

D	B	E	C		d_1 min	d_2 max
			Solid jaws	2-piece reversible jaws		
100	68	20	17	-	3	83
125	71,5	35	20	40	3	125
160	68,6	42	32	43	3	160

3-JAW CHUCKS WITH MORSE TAPER

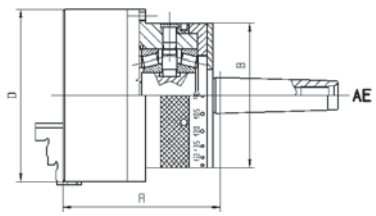

Basic indexing :
2, 3, 4, 6, 8, 12, 24

ROTATING DIVIDING WITH BLOCKING - type 9184, 9185

D	SM	A	B	min $^{-1}$	Weight approx. kg	Code No 0642	Code No 0642
						Type 9184	Type 9185
80	2	113,9	-	3000	3,9	840 100	-
80	3	113,9	-		4,1	840 113	-
100	3	123,4	-	2500	6,2	840 202	-
100	4	124,9	-		6,5	840 215	-
125	4	139,5	-	2000	11,0	840 317	850 315
125	5	139,5	-		12,0	840 320	850 328
160	4	148	125	1800	18,0	840 419	850 417
160	5	148	125		19,0	840 412	850 420

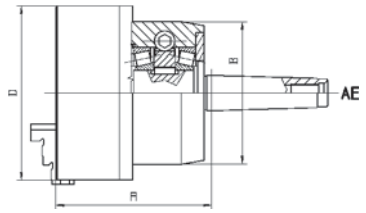

ROTATING WITH BLOCKING - type 9186, 9187

D	SM	A	B	min $^{-1}$	Weight approx. kg	Code No 0642	Code No 0642
						Type 9186	Type 9187
80	2	109	-	3200	3.6	591 860 107	-
80	3	109	-	3200	3.8	591 860 110	-
100	3	118.5	-	2800	6,0	591 860 209	-
100	4	120	-	2800	6,0	591 860 211	-
125	4	138.5	-	2500	11,0	591 860 313	591 870 311
125	5	138.5	-	2500	12,0	591 860 326	591 870 324
160	4	147	125	2200	18,0	591 860 402	591 870 400
160	5	147	125	2200	18.9	591 860 415	591 870 413

Example of order: 9186-80/2 AE or 0642 591 860 107

Standard accessories :
Type **9184, 9186** - chuck **3274**, hard outside and inside solid jaws, wrench.
Type **9185, 9187** - chuck **3275**, hard 2-piece reversible jaws, wrench.

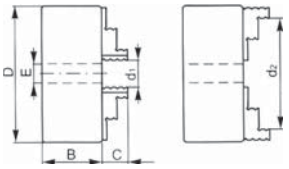

D	B	E	C		d_1 min	d_2 max
			Solid jaws	2-piece reversible jaws		
80	44	16	13	-	2	71
100	50	20	17	-	3	83
125	56	32	20	40	3	125
160	64.5	42	32	43	3	160

4-JAW INDEPENDENT CHUCKS WITH MORSE TAPER

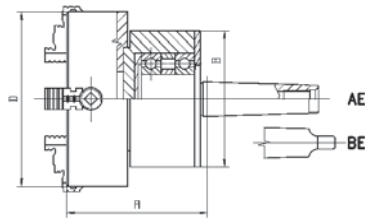

ROTATING - Type 4956

D	SM	A	B	min $^{-1}$	Weight approx. kg	Code No 0642
Type 4954						
100	4 AE	115	98	3500	6,0	549 543 016
125	4 AE	135.5	115	3200	8,0	549 543 102
160	4 AE	135.5	115	2800	11,2	549 543 207
160	5 AE	135.5	115	2800	12,0	549 543 309

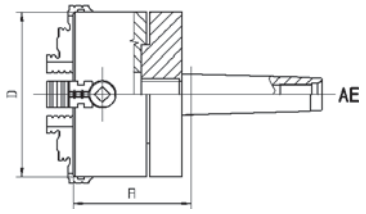

DEAD - Type 4956

D	SM	A	min $^{-1}$	Weight approx. kg	Code No 0642
Type 4956					
125	4 AE	72	3200	6,0	549 560 109

Example of order: 4956-125/4AE lub 0642 549 560 109

Standard accessories : chuck 4304, hard solid jaws, wrench.

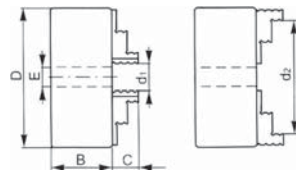

D	B	C	E	d_1 min	d_2 max
100	40	17	25	3	100
125	43	20	26	8	125
160	43	20	42	8	160